SAN FRANCISCO
PLANNING DEPARTMENT

Mandatory Discretionary Review Analysis

HEARING DATE: FEBRUARY 5, 2015

1650 Mission St.
Suite 400
San Francisco,
CA 94103-2479

Reception:
415.558.6378

Fax:
415.558.6409

Planning
Information:
415.558.6377

Date:	January 29, 2015
Case No.:	**2014.1377D**
Project Address:	**1 La Avanzada (aka 250 Palo Alto Avenue)**
Current Zoning:	RH-1(D) (Residential House, One-Family - Detached) 40-X Height and Bulk District
Block/Lot:	2724/003
Project Sponsor:	Sutro Tower Incorporated, represented by Kristen Thall Peters, Cooper White Cooper 25 Cadillac Drive, Suite 208 Sacramento, CA 95825
Staff Contact:	Omar Masry – (415) 575-9116 Omar.Masry@sfgov.org

PROJECT DESCRIPTION

This Mandatory Discretionary Review was initiated by the Planning Department pursuant to Resolution No. 11399, adopted by the Planning Commission on July 14, 1988, which established the Commission's policy requiring Mandatory Discretionary Review over building permit applications regarding Sutro Tower, its transmission equipment building, or any other part of its site (Lot 003 in Assessor's Block 2724).

The proposal is to allow the following modifications of Sutro Tower:

- addition of 51 broadcast and reception antennas, microwave dish antennas and camera mounts at various levels on the Tower;
- replacement and relocation of one (1) existing auxiliary radio antenna to a higher level on the Tower;
- installation of an approximately 6-foot tall, 62-foot long retaining wall southeast of the transmission building;
- implementation of a number of on-site erosion control and drainage improvements on the site's southern hillside;
- replacement of nine (9) blue gum eucalyptus trees with coast live oak trees on the southern hillside;
- installation of several exterior stairways and walkways;
- repair, replacement, and widening of a portion of the existing 16-foot-wide driveway; and
- installation of an at-grade receive-only satellite dish antenna (42 -foot diameter) and foundation to replace an existing smaller (10-foot diameter) ground-level antenna, serving a similar purpose.

No changes are proposed to tower lighting, the overall profile or structure of Sutro Tower, or the physical dimensions of the main transmission building.

SITE DESCRIPTION AND PRESENT USE

The Project Site is located at 1 La Avanzada (also known as 250 Palo Alto Avenue). The 5.6-acre site is owned by Sutro Tower, Incorporated. The site contains a 977-foot tall steel communications tower (Sutro Tower), a three-story 31,000-square-foot transmission building, a one-story 1,200 square-foot garage and storage building, and a one-story guard station, emergency generators, underground storage tanks, ancillary antennas and equipment associated with radio communications, landscaping and a surface parking lot.

The facility, although not the entire parcel, is completely enclosed within a security fence. Most of the area immediately surrounding the facility, including the majority of the northern half of the Project Site, consists of open space. The Tower has been in operation since 1973.

The Tower is located on one of the highest points in San Francisco (834 feet above sea level) and is generally visible from most places throughout the City.

La Avanzada forms the northern and a portion of the eastern boundary of the Project Site. Roughly the southernmost 320 feet of La Avanzada is owned by Sutro Tower, Inc.

Recent modifications to Sutro Tower include the digital television upgrade (Case No. 2007.0206D) and the addition of 15 new antennas (Case No. 2010.1006D) for Clearwire, a wireless data service provider, which was recently acquired by Sprint.

SURROUNDING PROPERTIES AND NEIGHBORHOOD

The Project Site is situated in the Twin Peaks neighborhood. The surrounding neighborhoods are characterized by single-family neighborhoods such as Midtown Terrace.

Summit Reservoir, owned and operated by the San Francisco Public Utilities Commission (SFPUC), is located adjacent to and east of the Sutro Tower facility. Open space exists on undeveloped land located immediately south of the Project Site. The closest residences to the Project Site are located along Dellbrook Avenue, Farview Court, and Palo Alto Avenue. Residential properties abut portions of the west side of the Project Site boundary; the nearest dwelling is located on Dellbrook Avenue, approximately 200 feet from the Tower.

ENVIRONMENTAL REVIEW

On October 23, 2008, the Planning Commission certified the Final Environmental Impact Report (FEIR, Case No. 2007.0206E) for the conversion of the antennas on the Tower from analog to digital television. That FEIR included a discussion of additional antennas on the Tower and concluded that capacity remained for additional facilities on the Tower.

The present request complies with the 2008 FEIR; however, pursuant to San Francisco Administrative Code Section 31.19(c)(1), an Addendum (also Case No. 2007.0206E) to the 2008 FEIR was prepared and approved by the Planning Department's Environmental Review Officer on December 23, 2014.

HEARING NOTIFICATION

TYPE	REQUIRED PERIOD	REQUIRED NOTICE DATE	ACTUAL NOTICE DATE	ACTUAL PERIOD
Posted Notice	20 days	January 16, 2015	January 16, 2015	20 days*
Mailed Notice	10 days	January 26, 2015	January 16, 2015	20 days*

**Notice placed on eight neighborhood locations as is past practice for Sutro Tower.*

***Mailed notice sent to property owners 20 days prior. Separate and subsequent mailed notice sent with "occupant" label to parcels within 1,000 feet.*

PUBLIC COMMENT

The Project Sponsor held a community meeting at the Saint John Armenian Church at 215 Olympia Way, to discuss the Project at 6:30 p.m. on January 7, 2015. Approximately 30 community members attended the meeting and included representatives of nearby neighborhood associations. Concerns included those listed below, along with a Planning Department response in *italics*:

- Concerns were expressed about the potential health impacts from existing and proposed radio-frequency (RF) emissions.
  The overall maximum RF emissions level at ground level would increase from 6.0% to 6.2% of the FCC's public exposure limit, assuming a worst-case scenario of all antennas operating at maximum capacity. To date, no adverse health effects have been noted by the Department of Public Health or the Federal Communications Commission (FCC).

- Concerns were expressed about whether the City can require, or the facility owner can commit to, limiting RF emissions, at ground/neighborhood level, to a specific threshold (e.g. 10%) below the maximum public exposure limit set by the FCC.
  As long as the proposed facility modifications do not result in predicted RF emission levels (at publicly accessible locations) that would exceed those standards set by the FCC, the City is unable to establish or require such a threshold. However, significant increases in ground-level RF emissions from future (non-specific) modifications are unlikely, as those antennas which would most likely generate significant amounts of RF emissions would likely to be placed on upper portions of the tower, thereby directing the bulk of the RF energy outward, instead of downward to ground level, which includes adjacent neighborhoods.

- Concerns were expressed about whether the proposed modifications are in compliance with the City's Wireless Facility Siting Guidelines, which seek to avoid the visual clutter associated with antenna farms when adding additional unscreened antennas.
  The City's Wireless Facility Siting Guidelines are primarily intended to address the proliferation of WTS facilities used for personal communications services (also known as "cellular"), though they do provide guidance for other WTS facilities.

  While the City generally prefers to avoid the placement or continued use of freestanding towers, large metropolitan areas, such as San Francisco, typically require a small number of hilltop tower sites, and/or antennas incorporated within prominent high-rise buildings, in order to provide a viable means of providing AM/FM and television broadcast, as well as public safety communications (e.g. Twin Peaks radio towers).

  San Francisco, as compared to many other metropolitan areas, faces a more unique challenge, given the small land area of the City and varying topology (steep hills), which places more residential neighborhoods in proximity of hilltop sites. The proposed modifications would not significantly increase overall visibility of the tower, and allowing modifications such as those proposed may reduce pressure to place antennas in other parts of the City where their placement may be more visually intrusive. As new antennas/dishes are added or replaced at ground level, such as the roof of the communications building, the new/replacement elements will be painted grey to reduce their overall visibility.

- Concerns were expressed about noise and debris (paint and metals) generated by construction of the proposed modifications, as well as ongoing operations (e.g. ground level cooling equipment) and maintenance.
  Over the last few years the facility operator has increased oversight of operational maintenance in order to reduce the potential for debris affecting nearby adjacent residential neighborhoods. The majority of paint and other materials that fall to the ground during maintenance typically fall within the fence line area of the facility. Noise related to paint removal (sandblasting) and similar ongoing maintenance occurs primarily on weekdays during daylight hours. As operational noise generating equipment, such as generators and cooling systems, reach the end of their life cycles and are then replaced, the facility operator is expected to use equipment that has a similar, or preferably lower, noise profile. A generator used for backup power was recently replaced with a model that generates less noise, and is generally not audible from adjacent residential neighborhoods.

- Concerns were expressed about whether additional notification (in addition to emails currently sent by the facility operator), such as posters can be placed at a nearby City-owned reservoir facility, in order to notify residents of the use of auxiliary antennas, which generate increases in ground level RF exposure.
  The facility operator regularly sends out emails to interested persons to notify them of scheduled use of the auxiliary antennas, which do result in temporary increases in ground level RF exposure, but continue to comply with the FCC's public and occupational exposure limits. The facility operator will continue to work to improve communications with the public, whether through electronic distribution or displaying site posters (assuming property owners permission for off-site location postings).

- Concerns were expressed about whether access to trails surrounding the facility (though outside the fence line) would remain open to the public.
  The City's General Plan (Recreation and Open Space Element, Policy 1.4) encourages collaboration with

other agencies and private property owners to provide for comprehensive trail networks. The trails located on private property around the facility connect to existing trail networks within the surrounding open space areas, including the adjacent Summit Reservoir. While "no trespassing" signs were recently installed near existing trails at the facility, the operator has indicated they are primarily intended to notify visitors that they are on private property and allow for police to cite those persons the property owner requests to leave the property. The facility operator has indicated they remain interested in working with the City and/or partner groups to retain public trail access.

- Concerns were expressed about the status of RF exposure levels generated by Sutro Tower at locations such as the City-owned Twin Peaks radio facility, and adjacent public observation point (1 Christmas Tree Point Road).
  As part of a proposed replacement of one of the two radio towers at Twin Peaks, RF measurements will be taken to ensure compliance with public and occupational exposure limits. In addition, the (Sutro) facility operator has agreed to include a measurement at Twin Peaks (public parking area at observation point) as part of the required post-operational neighborhood testing in the event the proposed modification is approved, and antennas/dishes are installed.

- Concerns were expressed about the replacement of eucalyptus trees with coast live oak trees, which may not be well suited for the area.
  Planning Department staff will continue to confer with interested parties, including Sutro Stewards, the Sutro facility operator, and the San Francisco Recreation and Parks Department (biodiversity coordinator) on the selection of trees as part of the proposed replacement and other potential improvements.

- Concerns were expressed about whether the proposed City-owned Community Broadband Network (CBN) microwave dishes would interfere with Wi-Fi within nearby residences.
  The proposed wireless radios would not be utilized to provide Wi-Fi (wireless internet) to nearby neighborhoods, but are to provide backhaul service for City broadband projects or partner non-profits. The radios would typically operate over 5 Gigahertz, an unlicensed frequency, and is not expected to interfere with consumer electronics within residences adjacent to Sutro Tower.

- Concerns were expressed about the overall public outreach conducted by Sutro Tower, and the lack of noticing to tenants within the surrounding neighborhoods about the proposed changes.
  The Planning Code requires noticing to property owners within 1,000 feet of the facility for any mandatory discretionary review hearing related to Sutro Tower. An additional notice, with an "occupant" label, has been sent to each parcel within 1,000 feet of the site.

ISSUES AND OTHER CONSIDERATIONS

- Health and safety aspects of all wireless Projects are reviewed by the Department of Public Health, San Francisco Fire Department, and the Department of Building Inspection.
- The ground level improvements, such as slope improvements on the southern hillside and addition of a retaining wall, would reduce instances of stormwater runoff affecting adjacent residential neighborhoods by reducing stormwater volumes and the potential for soil erosion. All ground level improvements would be required to comply with stormwater management rules.

- The new antennas (and microwave dishes) would be unscreened; however, their placement would not yield a noticeable increase in the visibility of the overall tower, nor would it further affect views from adjacent streets and public vistas.
- All required public notifications were conducted in compliance with the Planning Code and adopted WTS policies.

REQUIRED COMMISSION ACTION

Pursuant to Section 306.9 of the Planning Code, Mandatory Discretionary Review is required for building permits submitted that include work to be performed on the site of Sutro Tower.

BASIS FOR RECOMMENDATION

This Project is necessary and/or desirable under Section 303 of the Planning Code for the following reasons:

- The Project complies with the applicable requirements of the Planning Code.
- The Project is consistent with the Objectives and Policies of the General Plan.
- The Project is consistent with the 1996 WTS Facilities Siting Guidelines, Planning Commission Resolution No. 14182, 16539, and 18523 supplementing the 1996 WTS Guidelines.
- Health and safety aspects of all wireless projects are reviewed under the Department of Public Health and the Department of Building Inspections.
- The expected RF emissions fall well within the limits established by the Federal Communications Commission (FCC). In addition the overall Project would relocate a portion of the antennas to locations further upward on Sutro Tower, thereby reducing overall RF exposure in adjacent neighborhoods.
- The conditions of approval for Sutro Tower would continue to require a third-party engineer to take RF energy measurements at 200 locations within the surrounding neighborhood every three (3) years and after the modifications proposed by this Project.
- According to the Wireless Telecommunications Services (WTS) Facilities Siting Guidelines, the Project Site is Location Preference 2 (Preferred Location, Co-Location) site.

RECOMMENDATION:	**Do not take DR and Approve as Proposed, subject to Standard Sutro Tower Conditions of Approval**

Attachments:
Zoning Map
Aerial Photograph
Parcel Map
Block Book Map
Sanborn Map
Photo Simulations
Addendum to the 2008 Final Environmental Impact Report (FEIR)
Public Comments
Reduced Plans

Standard Antenna Conditions

The Conditions contained in this document were imposed by the Planning Commission on the antenna-related permits (the above-referenced permit applications) at its hearing of February 16, 2006. It is the intent of the Commission, as so moved and adopted as Commission policy at said hearing, to impose these standard conditions (as a Notice of Special Restrictions) regarding inspections, RF levels (monitoring), operation and neighborhood communication (including notification) on all future antenna-related permits for Sutro Tower.

A. **STRUCTURAL INSPECTIONS**: In June of 1999, the Department of Building Inspection accepted an Inspection Protocol governing Sutro Tower. Sutro Tower, Inc. (hereinafter STI) shall adhere to said Inspection Protocol as summarized below:

1. **Annual Inspection ("Routine Inspection")**:

   a. STI shall have an independent testing laboratory approved by the Department of Building Inspection ("independent laboratory") conduct Annual. The Annual Inspection shall consist of visual observations and/or measurements needed to determine the physical and functional condition of the Tower and to identify any changes from the Baseline Inspection that was conducted in 1999 pursuant to the Inspection Protocols or from previously recorded conditions. Each Annual Inspection shall cover approximately one-third of the Tower such that the entire structure will be evaluated over a three-year interval.

   b. A California-licensed professional engineer retained by STI ("licensed engineer") shall review the results of the Annual Inspection, along with prior inspection results, to determine the extent of remedial action that may be necessary. The licensed engineer shall also ensure that the detailed inspection plan for subsequent years is modified to reflect any additional inspection requirements or areas where more in-depth inspection is required.

   c. STI shall undertake all additional inspections recommended by the licensed engineer as a result of the Annual Inspection.

   d. STI shall undertake all remedial action recommended by the licensed engineer as a result of the Annual Inspection. A Special Inspection shall thereafter be conducted to assess the performance of any repairs resulting from the Annual Inspection.

   e. A report of each Annual Inspection shall be prepared by the licensed engineer and submitted to the Planning Department and to the Department of Building Inspection within 45 days of the inspection, and those reports shall be made available to members of the public.

f. STI shall send notice of the availability of each Annual Inspect report to representatives of the Twin Peaks Improvement Association and Midtown Terrace Homeowners Association.

2. **In-Depth Inspection**

a. In 2004 and every five years thereafter or as otherwise required by the licensed engineer during an Annual Inspection or Event Inspection, STI shall have an independent laboratory conduct a close-up, hands-on inspection of one or more structural members or connections to identify problems not readily detectable with a visual review in the Annual Inspection.

b. If recommended by the licensed engineer to fully ascertain the presence or extent of damage, STI shall have non-destructive field-testing, load tests, and/or materials tests performed by an independent testing laboratory.

c. STI shall undertake all additional inspections recommended by the licensed engineer as a result of the In-Depth Inspection.

d. STI shall undertake all remedial action recommended by the licensed engineer as a result of the In-Depth Inspection. A Special Inspection shall thereafter be conducted to assess the performance of any repairs resulting from the In-Depth Inspection.

e. A report of each In-Depth Inspection shall be prepared by the licensed engineer and submitted to the Planning Department and to the Department of Building Inspection within 45 days of the inspection, and those reports shall be made available to members of the public.

f. STI shall send notice of the availability of each In-Depth Inspection report to representatives of the Twin Peaks Improvement Association and Midtown Terrace Homeowners Association.

3. **Event Inspection ("Unscheduled Inspection")**

a. As required by a licensed engineer, STI shall have an independent laboratory conduct an Event Inspection as soon as practical after the occurrence of a severe storm, earthquake, mudslide, or other triggering environmental event that exceeds the design load of the Tower (winds in excess of 70 miles per hour at 10 meters in elevation, or a 1000-year seismic event as defined in the dynamic analysis report of June 1999).

b. Following a severe storm or earthquake, particular inspection attention shall be given to detecting damage and indirect signs of damage such as areas of missing cladding, paint cracking due to yielding of steel members, spalling of concrete, misalignment in connections, loosening or lengthening of bolts, or obvious structural displacements.

Depending on the severity of the triggering storm or earthquake, an In-Depth Inspection may be appropriate in areas of local damage to the Tower.

c. STI shall undertake all additional inspections recommended by the licensed engineer as a result of the Event Inspection.

d. STI shall undertake all remedial action recommended by the licensed engineer as a result of the Event Inspection. A Special Inspection shall thereafter be conducted to assess the performance of any repairs resulting from the Event Inspection.

e. A report of each Event Inspection shall be prepared by the licensed engineer and submitted to the Planning Department and to the Department of Building Inspection within 45 days of the inspection, and those reports shall be made available to members of the public.

f. STI shall send notice of the availability of each In-Depth Inspection report to representatives of the Twin Peaks Improvement Association and Midtown Terrace Homeowners Association.

4. **Special Inspections**

a. STI shall have an independent laboratory conduct a Special Inspection to monitor repairs resulting from previous inspections or to otherwise assess the performance of repairs implemented to ensure the structural integrity of the Tower. The Special Inspection shall be undertaken as part of an Annual Inspection conducted within one year after completion of the repair, if practical, or during the next inspection cycle.

b. STI shall have an independent laboratory conduct a Special Inspection as recommended by a licensed engineer for any reason, including monitoring defects, damage, local corrosion, or other conditions potentially affecting the structural integrity of the Tower.

c. STI shall undertake all additional inspections recommended by the licensed engineer as a result of the Special Inspection.

d. STI shall undertake all remedial action recommended by the licensed engineer as a result of the Special Inspection.

e. A report of each Special Inspection shall be prepared by the licensed engineer and submitted to the Planning Department and to the Department of Building Inspection within 45 days of the inspection, and those reports shall be made available to members of the public.

f. STI shall send notice of the availability of each In-Depth Inspection report to representatives of the Twin Peaks Improvement Association and Midtown Terrace Homeowners Association.

5. **Enforcement**

   a. Technical compliance with conditions regarding structural inspection shall be monitored and enforced by the Department of Building Inspection. The Planning Department shall enforce these conditions only at the recommendation of the Director of the Department of Building Inspection.

   b. STI shall provide to the Planning Department a complete set of all building permit application materials required by the Department of Building Inspection, including but not limited to: scaled drawings, elevations, site plans, engineering or structural analyses, and photographs.

B. **RADIO FREQUENCY (RF) LEVEL**

1. **FCC Emission Compliance**: It shall be a continuing condition of this permit that the subject antennas be operated in such a manner so as not to contribute to ambient RF emissions in excess of the then-current FCC emission standards for public exposure. Violation of this condition shall be grounds for revocation.

2. **Publicly-Accessible Property:**

   a. Consistent with the agreement between STI and the Planning Commission at its February 26, 1998, hearing on DTV antenna installation, STI shall measure RF public exposure levels at 200 publicly-accessible sites within 1000 feet of the Tower. Measurement shall be made each three years, or within six months of the activation of any DTV broadcasting antenna, or within six months of any increase in power from any main ◎DTV◎ antenna's initial power level, whichever is earliest.

   b. STI shall notify the Department of Public Health at least three days before taking any RF exposure measurements at publicly accessible sites. A representative of the Department of Public Health and up to two community observers identified by the Department of Public Health may observe the measurement session and recommend sites for measurement.

   c. STI shall promptly remedy any ambient or localized field found by these measurements to exceed the FCC standard for RF exposure ("Guidelines for the Evaluation of the Environmental Effects of Radio Frequency Radiation") and then take new measurements to demonstrate compliance with the standard.

   d. A report of any RF exposure measurements required herein shall be submitted to the Planning Department and the Department of Public Health within 45 days of the measurements, and those reports shall be made available to members of the public.

e. STI shall send notice of the availability of each ◎RFR◎ exposure report to representatives of the Twin Peaks Improvement Association and Midtown Terrace Homeowners Association.

3. **Private Property:**

a. Upon a written request to STI from an individual property owner within 1000 feet of the Tower, STI shall measure RF exposure levels at the accessible front yard and rear yard of the property. If RF levels in the yards comply with the 1996-FCC standard for RF exposure, then no additional measurements shall be thereafter required for any reason until three years have elapsed, at which time the property owner may submit a new written request for exposure level measurements.

b. With the cooperation and approval of the property owner, STI shall promptly remedy and ambient or localized field found by these measurements to exceed the FCC standard and then take new measurements to confirm compliance with the standard.

c. With the written approval of the owner of the private property requesting the RF exposure level measurements, STI shall submit a report to the Planning Department and to the Department of Public Health within 45 days of the measurements, and those reports shall be made available to members of the public.

4. **Enforcement**:

a. Technical compliance with conditions pertaining to RFR exposure shall be monitored and enforced by the Department of Public Health. The Planning Department shall enforce these conditions only at the recommendation of the Director of the Department of Public Health.

C. **NEIGHBORHOOD COMMUNICATION**

1. **Notice**: Within ten days of submitting any report required herein to any public agency, STI shall send notice of the availability of that report to representatives of the Twin Peaks Improvement Association, Forest Knolls Neighborhood Association and Midtown Terrace Homeowners Association.

2. **Community Liaison**: STI shall appoint a community liaison to respond to neighborhood inquiries and concerns. STI shall invite the Twin Peaks Improvement Association, Forest Knolls Neighborhood Association and the Midtown Terrace Homeowners Association to appoint one community liaison each with whom to communicate regarding Sutro Tower operations.

Zoning Map

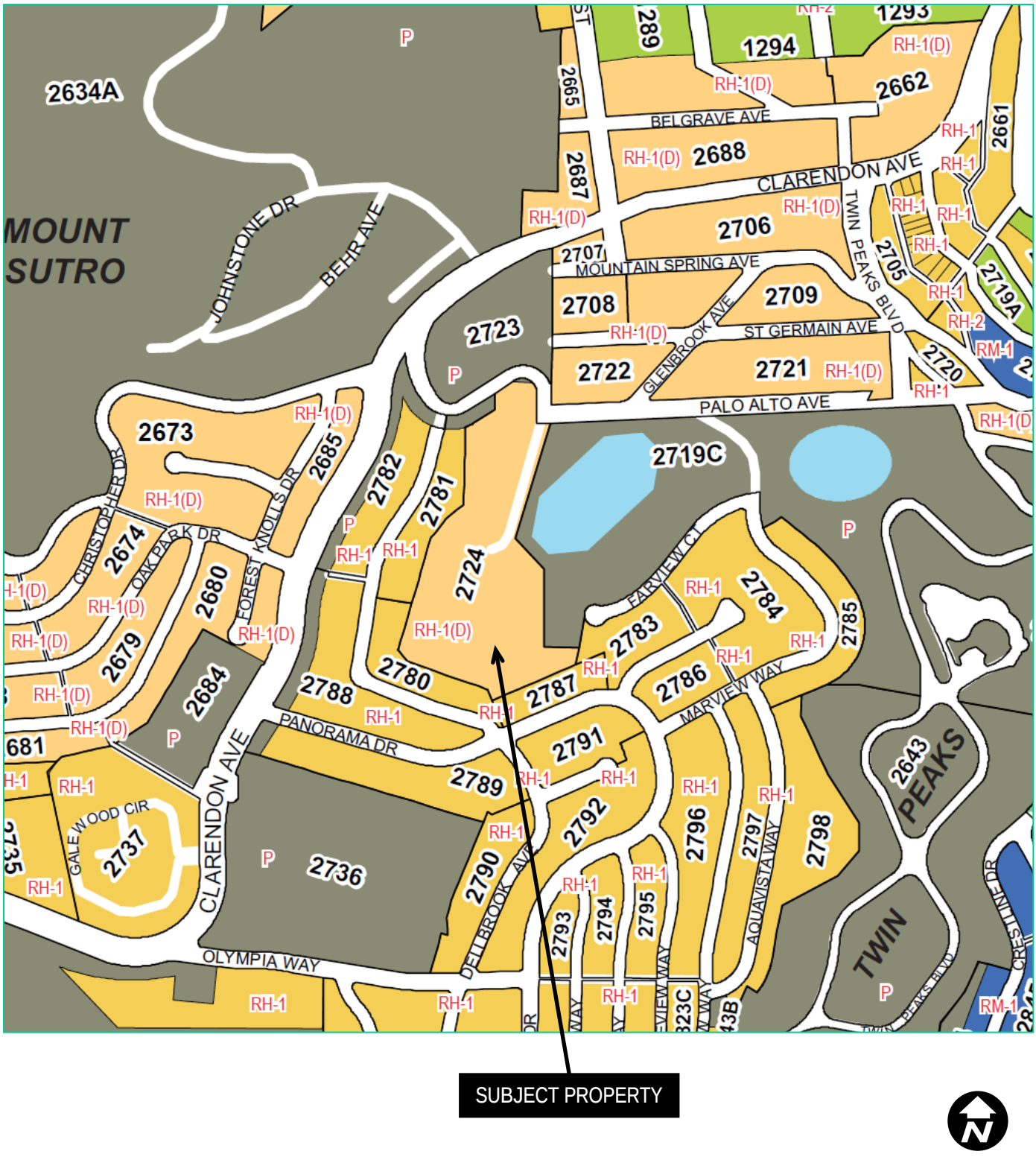

Case Number 2014.1377D
Sutro Tower Modification Mandatory DR
1 La Avanzada (aka 250 Palo Alto Avenue)

SAN FRANCISCO
PLANNING DEPARTMENT

Aerial Photo



Case Number 2014.1377D
Sutro Tower Modification Mandatory DR
1 La Avanzada (also 250 Palo Alto Avenue)

Parcel Map

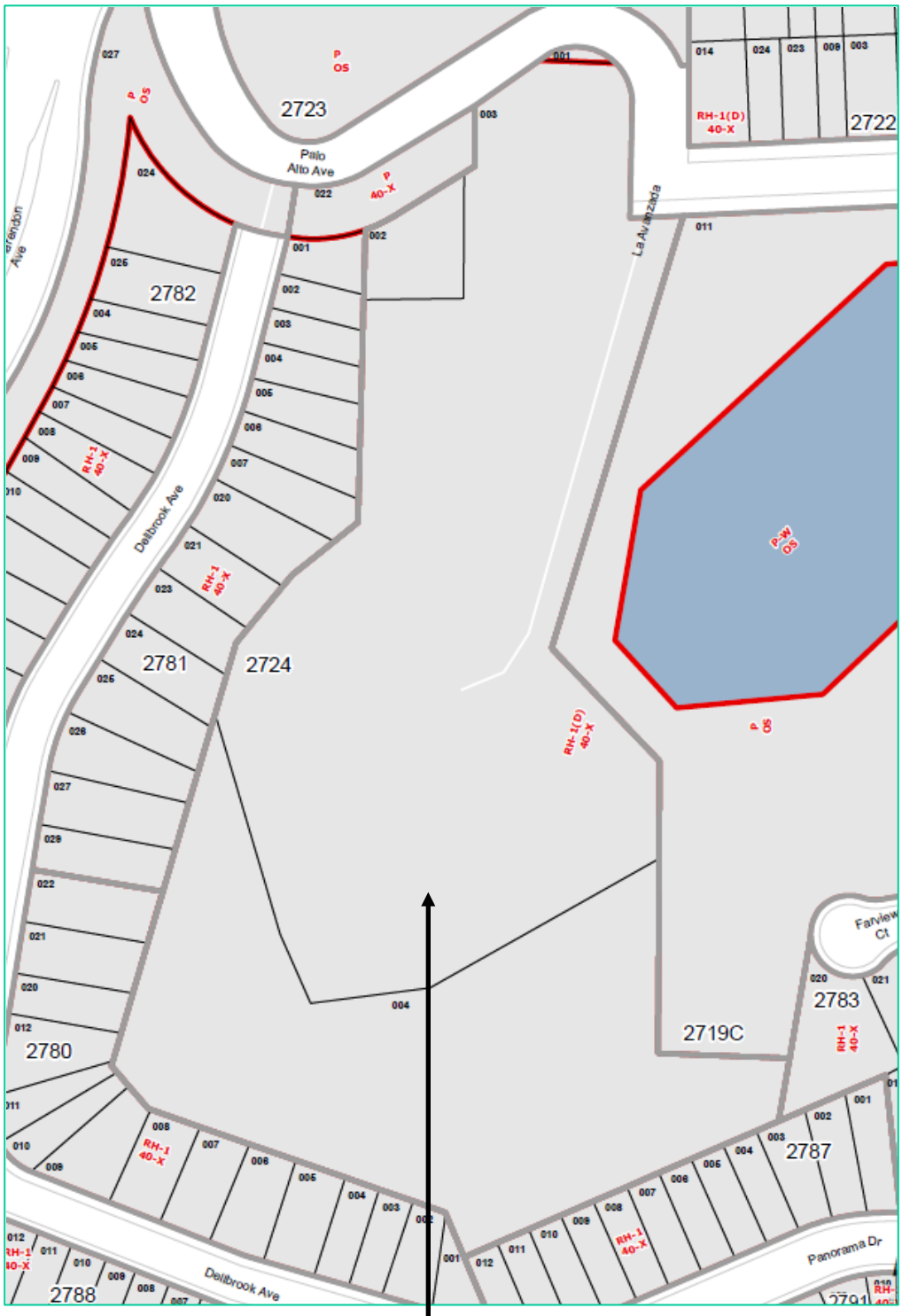

Case Number 2014.1377D
Sutro Tower Modification Mandatory DR
1 La Avanzada (also 250 Palo Alto Avenue)

Sanborn Map*

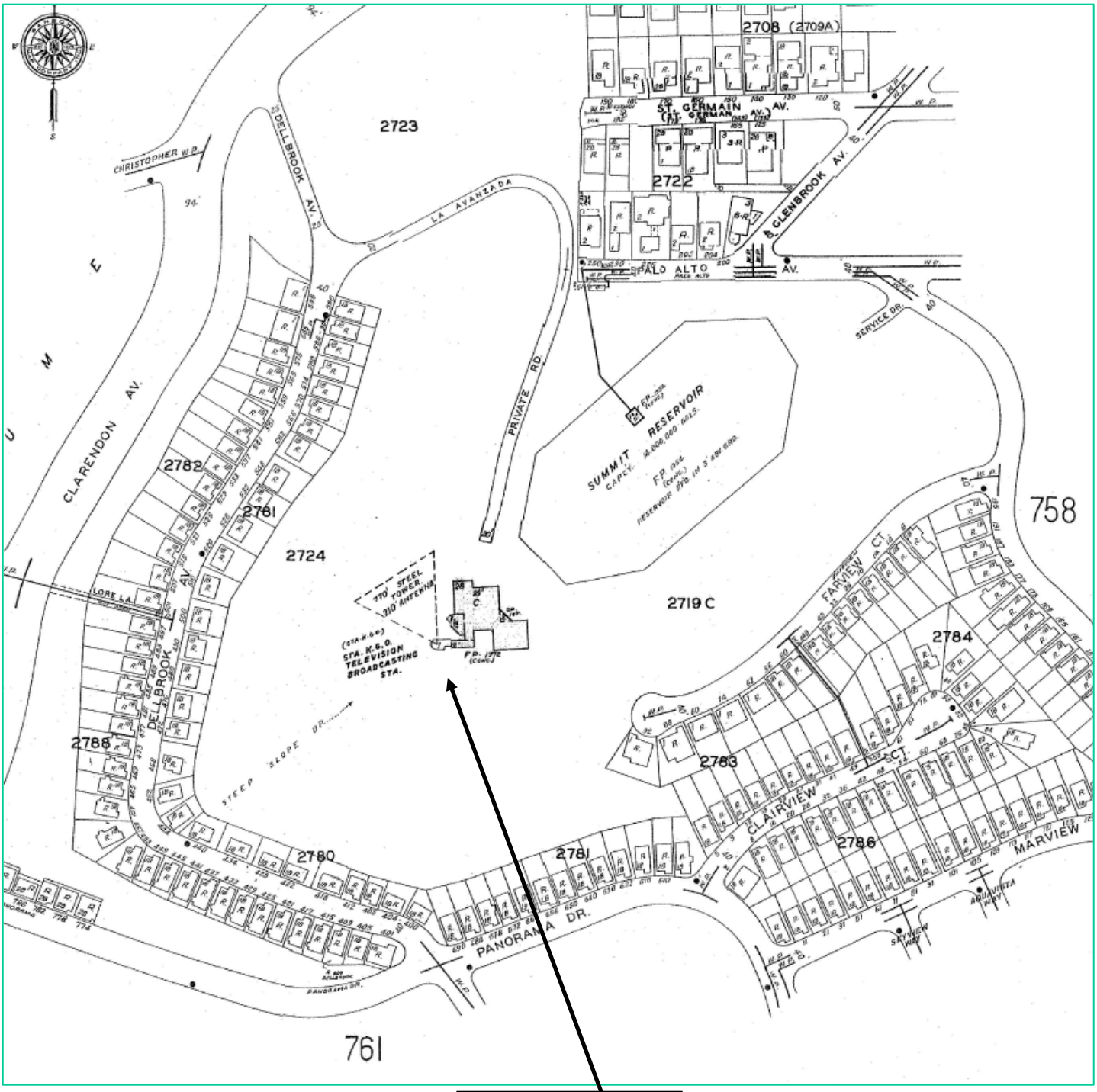

**The Sanborn Maps in San Francisco have not been updated since 1998, and this map may not accurately reflect existing conditions.*

Case Number 2014.1377D
Sutro Tower Modification Mandatory DR
1 La Avanzada (also 250 Palo Alto Avenue)



Simulation does not reflect proposed ground improvements, including new retaining wall, hillside erosion control, driveway widening, or tree removal/replacement.

SOURCE: Previsualists, Inc., 2013

2007.0206E: Sutro Tower Antenna Additions and Site and Erosion Control Improvements

Figure 5
Photosimulation of View Looking West from Twin Peaks



Simulation does not reflect proposed ground improvements, including new retaining wall, hillside erosion control, driveway widening, or tree removal/replacement.

SOURCE: Previsualists, Inc., 2013

2007.0206E: Sutro Tower Antenna Additions and Site and Erosion Control Improvements

Figure 6
Photosimulation of View Looking North from Johnstone Drive, across Clarendon Avenue

SAN FRANCISCO
PLANNING DEPARTMENT

1650 Mission St.
Suite 400
San Francisco,
CA 94103-2479

Reception:
415.558.6378

Fax:
415.558.6409

Planning
Information:
415.558.6377

Addendum to Environmental Impact Report

Date:	December 19, 2014
Case No.:	**2007.0206E**
Project Title:	Sutro Tower Antenna Additions and Site and Erosion Control Improvements
EIR:	Sutro Tower Digital Television Project Final EIR
Zoning:	RH-1(D); 40X Height and Bulk District
Block/Lot:	2724/003
Lot Size:	224,996 square feet
Project Sponsor	Sutro Tower, Inc. Eric Dausman – 415.681.8850 – ericd@sutrotower.com
Lead Agency:	San Francisco Planning Department
Staff Contact:	Tania Sheyner – 415.575.9127 – tania.sheyner@sfgov.org

PROJECT DESCRIPTION

Background

On October 23, 2008, the San Francisco Planning Commission certified the Sutro Tower Digital Television Project Final Environmental Impact Report (FEIR), in compliance with the California Environmental Quality Act (CEQA), and approved the conversion of television antennas on Sutro Tower from an analog/ digital system to an all-digital system (hereafter referred to as the 2008 project). These improvements included:

1. replacement of the nine existing analog main antennas at the top of Sutro Tower with no more than five digital main antennas at the same location;
2. structural upgrades to the tower to meet applicable *Building Code* wind resistance requirements for an "essential facility" and accommodate the placement of new digital television equipment on the tower;
3. removal of four digital main television antennas between tower Levels 5 and 6 (see Figure 2 for tower level locations);
4. removal of nine analog auxiliary television antennas on tower Level 2 and installation of two digital auxiliary antennas extending between tower Levels 3 and 4 and one digital auxiliary antenna at tower Level 2;
5. alteration, replacement or addition of a number of small ancillary antennas and equipment on the tower, transmitter building rooftop and secured grounds; and
6. addition of auxiliary equipment and electrical, elevator and public safety improvements.

The improvements described above were completed in the summer of 2011.[1]

Setting

The project site is located at 1 La Avanzada Street in San Francisco's Midtown Terrace neighborhood (see **Figure 1**, Project Location). The 5.6-acre site is owned by Sutro Tower, Inc., the project sponsor. The site contains a 977-foot tall steel communications tower (Sutro Tower), a three-story 31,000-square-foot transmission building, a one-story 1,200 square-foot garage and storage building, and a one-story guard station, emergency generators, underground storage tanks, ancillary antennas and equipment associated with radio communications, landscaping and a surface parking lot.[2] The facility, although not the entire parcel, is completely enclosed within a security fence. Most of the area immediately surrounding these facilities, including the great majority of the northern half of the project site, consists of open space. The tower has been in operation since 1973.

The tower is located on one of the highest points in San Francisco (834 feet above sea level) and is generally visible from most places in the City. Surrounding neighborhoods include Forest Hill and the Sunset to the west, the Castro and Noe Valley to the east, Diamond Heights and Miraloma Park to the south, and Haight Ashbury and Cole Valley to the north. La Avanzada Street forms the northern and a portion of the eastern boundary of the project site. Roughly the southmost 320 feet of La Avanzada Street is owned by the project sponsor (Sutro Tower, Inc.). Summit Reservoir, owned and operated by the San Francisco Public Utilities Commission (SFPUC), is located adjacent to and east of the Sutro Tower property. Open space exists on undeveloped land located immediately south of the project site. The closest residences to the project site are located along Dellbrook Avenue, Farview Court, and Palo Alto Avenue. Residential properties abut portions of the west side of the project site boundary; the nearest dwelling is located on Dellbrook Avenue, approximately 200 feet from the tower.

Proposed Modifications

The project sponsor proposes a number of additional improvements at the project site, hereafter referred to as the modified project. Under the modified project, proposed improvements on Sutro Tower include the addition of 50 broadcast and reception antennas, microwave dish antennas and camera mounts at various levels on the tower, and replacement and relocation of one existing auxiliary radio antenna to a higher level on the tower.[3] A limited number of the newly-proposed additions would be main or auxiliary broadcasting

---

1 It should be noted that in January 2011, the Planning Commission also determined that the subsequent addition to the tower of fourteen new antennas and one microwave dish for wireless data service provider Clearwire, LLC fell within the project analyzed in the 2008 FEIR and was not subject to further CEQA analysis. These subsequent improvements were completed in May 2013.

2 The three-story transmission building is three stories (approximately 40 feet high) on the reservoir side and two stories (approximately 28 feet high) on the parking lot side. The garage and storage building is approximately 16 feet high. The guard shack is approximately nine feet high.

3 *Broadcast antennas* – These types of antennas radiate energy from an oscillating electric current in conjunction with the transmission of radio/television signals on specific frequencies. They are the primary source of radio frequency radiation ("RFR") associated with tower operations. Such antennas are generally the largest on the tower and located at the higher levels to allow for a broader range of coverage, as well as to minimize ground level RFR exposure.

Reception antennas – These types of antennas receive radio/television signals sent on specific frequencies. They are not a source of RFR and are generally smaller than broadcast antennas.

Auxiliary antennas – These types of antennas are used as back-up by radio/television broadcasters in limited situations when main antennas are non-operational, typically due to repair, replacement, testing or in emergency situations.

Microwave dish antennas – These types of antennas receive and transmit radio signals for a variety of communications uses and require an unobstructed line of site with other transmitting sources. They are found in numerous locations on the tower in a wide range of sizes, but are typically much smaller than broadcast/reception antennas. Since the antennas concentrate the energy into a beam towards a distant point, their contribution to radio frequency radiation associated with tower operation is minimal.

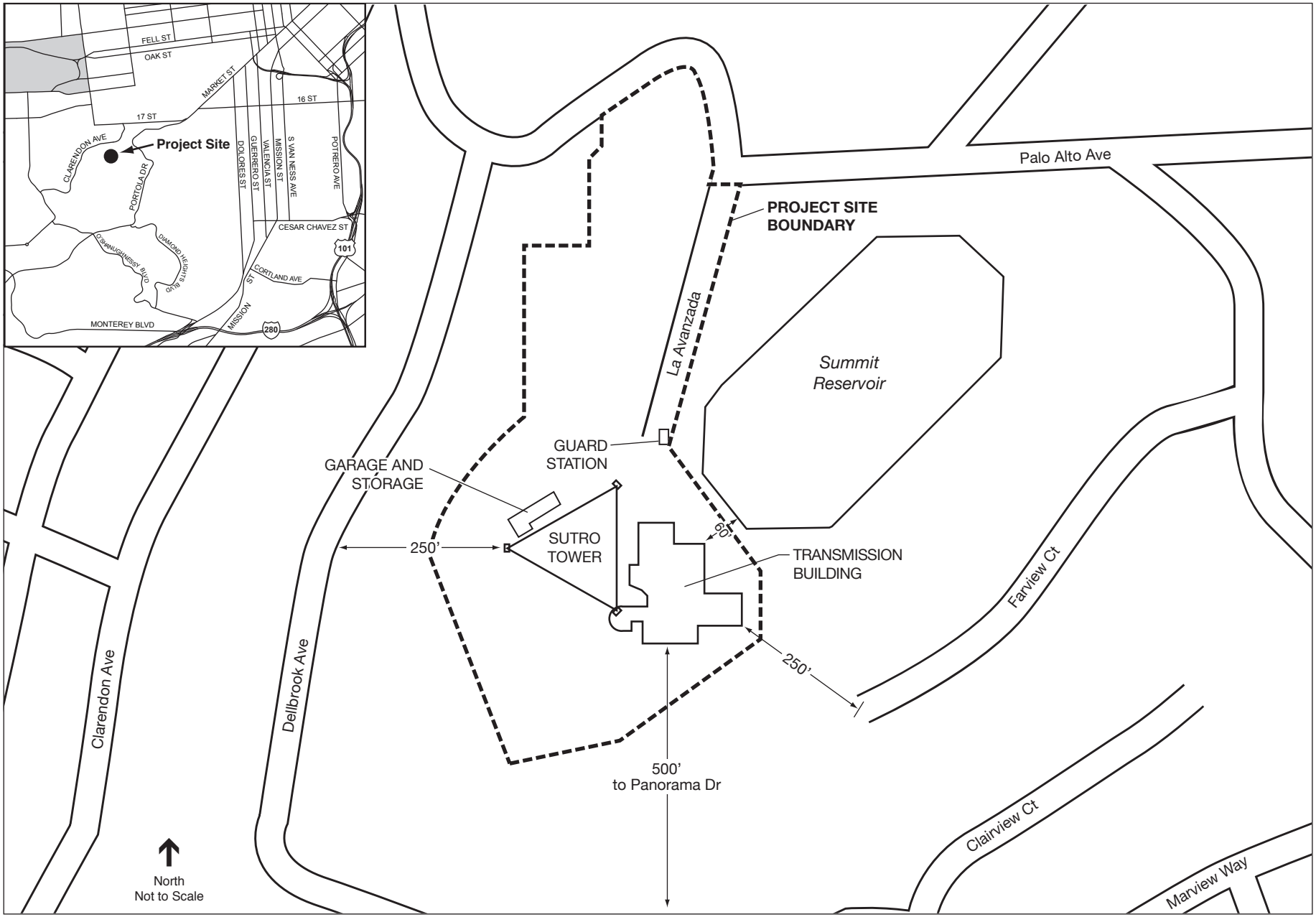

SOURCE: ESA, 2014

2007.0206E: Sutro Tower Antenna Additions and Site and Erosion Control Improvements

Figure 1
Project Location

antennas. In part, such proposed antennas are intended to ensure accessibility to public broadcasting in an emergency, and for certain television station tenants, to provide increased access to diverse groups of foreign language viewers, including in Spanish and several Asian languages. Most of the newly-proposed additions are smaller-scale antennas and equipment, including 15 antennas for San Francisco's Community Broadband Network which provides Internet access for the San Francisco Housing Authority's developments and several San Francisco Public Library branches among other facilities,[4] and six dish antennas requested by the BayWEB emergency response communication system that would provide region-wide interoperable communications for law enforcement and first responders.

In addition, under the modified project, a number of proposed improvements would occur elsewhere on the project site. This includes the installation of an approximately 6-foot-tall, 62-foot long retaining wall southeast of the transmission building; implementation of a number of on-site erosion control and drainage improvements on the site's southern hillside; installation of several exterior stairways and walkways; repair, replacement, and widening of a portion of the existing 16-foot-wide driveway; and installation of an at-grade receive-only satellite dish antenna and foundation to replace an existing smaller ground-level antenna serving a similar purpose.

These improvements are described in detail, below, grouped as Antennas/Equipment Additions and Other Site Improvements.

Antennas/Equipment Additions

The antennas/equipment improvements proposed under the modified project include the following:

- 2 additional TV main broadcast antennas
- 1 additional FM radio main broadcast antenna
- 1 relocated existing FM auxiliary antenna
- 1 additional standby FM auxiliary antenna
- 1 additional TV auxiliary antenna
- 1 FM radio translator antenna
- 15 community broadband antennas
- 16 point-to-point microwave antennas (of which 3 are receive-only)
- 11 other receive-only antennas
- 2 camera mounts
- 1 ground-level satellite receive-only dish

In total, 50 new broadcast and reception antennas, microwave dish antennas and camera mounts would be installed at various levels on the tower, one existing auxiliary radio antenna would be replaced and relocated to a higher level on the tower, and one ground-level satellite dish antenna would be installed approximately 30 feet west of, and replacing, an existing smaller antenna.

[4] Other facilities include the Literacy for Environmental Justice EcoCenter; the Sunset Neighborhood Beacon Center; and certain sites across the City that will enable the San Francisco Department of Technology to expand computer access and training for seniors and those with disabilities.

Figure 2 illustrates the existing and proposed configuration of antennas on Sutro Tower under the modified project. **Table 1** provides detail of the proposed tower and ground-level antennas/equipment improvements, including the type of proposed antenna/equipment; customer; height above ground, weight, and power of the antenna/equipment; and the purpose of each proposed antenna/equipment.

Under the modified project, five of the proposed antennas to be installed on the tower (see Table 1, Reference Nos. 1 through 5) and the antenna proposed to be replaced and relocated from the tower second level to fifth level (Table 1, Reference No. 51) would consist of main or auxiliary/emergency broadcasting antennas for various television and radio stations. The remaining antennas/equipment additions proposed under the modified project would be comparatively smaller-scale, with all but two weighing 200 pounds or less. Six antennas (see Table 1, Reference Nos. 20 through 25) are proposed at the request of the San Francisco Department of Emergency Management to support the City's participation in the Bay Area Wireless Enhanced Broadband (BayWEB) network, a new region-wide interoperable high-speed communications network under development for use by law enforcement personnel and first responders. Fifteen of the new antennas (see Table 1, Reference Nos. 26 through 40) are proposed at the request of the San Francisco Department of Technology to support the City's Community Broadband Network, which provides WiFi internet access to numerous community organizations, certain San Francisco Public Library branches, and all San Francisco Housing Authority developments. The remaining new antennas would provide additional communications capabilities for existing television station and other users of Sutro Tower. All tower antenna/equipment proposed under the modified project would be composed of non-reflective metal (unpainted) or painted the same color as the existing antennas (white) or structure (in approved colors of aviation red or white) depending on placement and location on the tower.

The proposed at-grade, receive-only satellite dish antenna would replace an existing 10-foot diameter circular ground-level antenna near the same location, which serves a similar purpose. This proposed rectangular antenna would measure approximately 42 feet by 22 feet and have a stock white color. The proposed satellite dish antenna would be installed approximately 30 feet west of the existing satellite dish antenna being replaced (see also description of proposed satellite dish antenna foundation, below).

Other Site Improvements

A number of other site improvements would occur on the property. As illustrated in **Figure 3**, this includes the installation of a retaining wall southeast of the transmission building; implementation of a number of on-site erosion control and drainage improvements on the site's southern hillside; installation of several exterior stairways and walkways; installation of a foundation to accommodate the proposed replacement ground-level satellite dish antenna; and, as illustrated in **Figure 4**, repair, replacement, and widening of a portion of the existing driveway. Each of these improvements is described in detail below.

Retaining Wall

As shown in Figure 3, a concrete retaining wall is proposed just southeast of the transmission building to provide slope stabilization and address soil erosion that has occurred at this location over time. The retaining wall would measure approximately 62 feet in length, one-foot in width, and would vary in height with a maximum of approximately six feet above grade. Thirteen 24-inch diameter concrete piers would be installed along the length of the retaining wall to provide structural support. The piers would be drilled between 8 and 12 feet into underlying bedrock. A perforated drain pipe embedded in drain rock would be installed along the length of the retaining wall to facilitate drainage away from the wall.

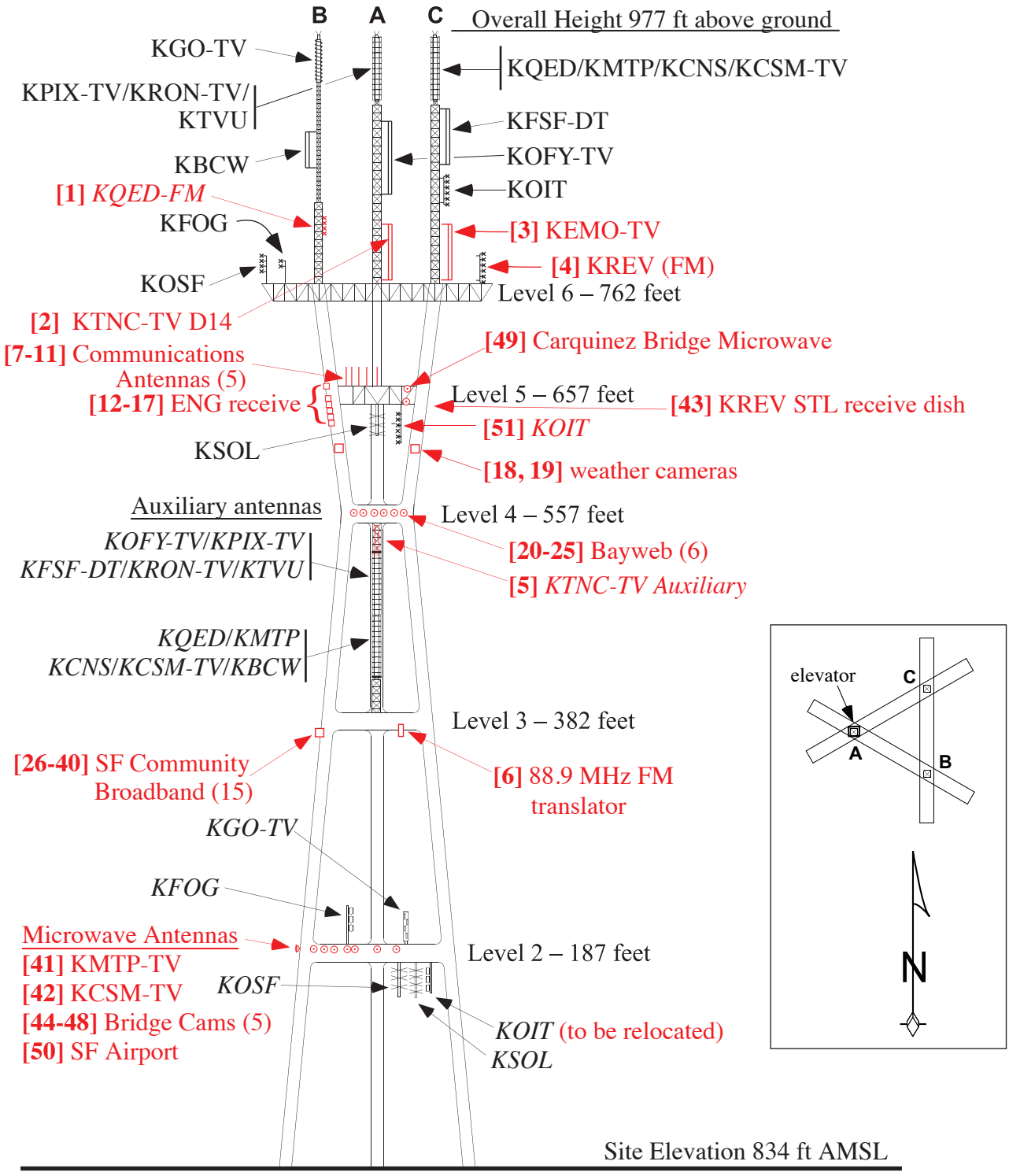

Auxiliary antennas in *italics*. Proposed antennas in red.
Numbers in **[brackets]** correlate with reference numbers in Table 1.
Not to scale.

SOURCE: Hammett & Edison, Inc., 2014

2007.0206E: Sutro Tower Antenna Additions and Site and Erosion Control Improvements

Figure 2
Summary of Proposed Additions to Sutro Tower (View from East)

TABLE 1
PROPOSED ANTENNAS/EQUIPMENT IMPROVEMENTS

Reference No.	Description	Customer	Height Above Ground (ft.)	Dimensions (ft.)	Weight (lbs)	Power/ Polarization[a]	Purpose
Sutro Tower							
1	Emergency FM Antenna	KQED FM Radio	815	40 feet in height, rototiller style	700	20 kW/C	Adds emergency capability for KQED Radio
2	TV (Channel 14) Main Broadcast Antenna	KTNC Television	800	56.1 feet in height, 1.5 feet in diameter	2,000	1,000 kW/E	Improve Bay Area coverage
3	TV (Channel 32) Main Broadcast Antenna	KEMO Television	800	48 feet in height, 3 feet in diameter	2,000	200 kW/H	Booster to improve San Francisco coverage
4	FM Radio Main Broadcast Antenna	KREV FM Radio	762	30 feet in height, mounted on a 30-foot pipe, rototiller style	1,000	0.27 KW/C	Moves main antenna to higher location
5	TV (Channel 14) Broadcast Auxiliary Antenna	KTNC Television	525	27 feet in height, 1.5 feet in diameter	1,000	250 kW/E	Improve Bay Area coverage
6	FM Translator Antenna	KLOVE (Educational Media Foundation)	375	2 multi-element antennas, each approximately 6 feet in height and 7.5 feet in length, plus pipe	200	0.070 kW/C	Translator on 88.9 MHz to improve coverage in San Francisco
7	Communications Receive Antenna (136-174 MHz)	Sutro Tower Level 3 and 4 customers	657	11.5 feet in height, 3 inches in diameter	32	none-receive only	Technology change - splits receivers on tower Levels 3 and 4
8	Communications Receive Antenna (330-420 MHz)	Sutro Tower Level 3 and 4 customers	657	6.9 feet in height, 3 inches in diameter	11	none-receive only	Technology change - splits receivers on tower Levels 3 and 4
9	Communications Receive Antenna (400-520 MHz)	Sutro Tower Level 3 and 4 customers	657	16.4 feet in height, 3 inches in diameter	18	none-receive only	Technology change - splits receivers on tower Levels 3 and 4
10	Communications Receive Antenna (746-806 MHz)	Sutro Tower Level 3 and 4 customers	657	11.8 feet in height, 3 inches in diameter	8	none-receive only	Technology change - splits receivers on tower Levels 3 and 4
11	Communications Receive Antenna (806-860 MHz)	Sutro Tower Level 3 and 4 customers	657	6 feet in height, 3 inches in diameter	5	none-receive only	Technology change - splits receivers on tower Levels 3 and 4
12	Second ENG Receive Antenna	KTVU TV	670	5.3 feet in height, 4.7 feet in diameter	200	none-receive only	Add southeast news truck coverage
13	Second ENG Receive Antenna	KRON TV	650	5.3 feet in height, 4.7 feet in diameter	200	none-receive only	Add southeast news truck coverage
14	Second ENG Receive Antenna	KPIX TV	640	5.3 feet in height, 4.7 feet in diameter	200	none-receive only	Add southeast news truck coverage
15	Second ENG Receive Antenna	KGO TV	630	5.3 feet in height, 4.7 feet in diameter	200	none-receive only	Add southeast news truck coverage
16	Second ENG Receive Antenna	KNTV TV	620	5.3 feet in height, 4.7 feet in diameter	200	none-receive only	Add southeast news truck coverage

TABLE 1 (Continued)
PROPOSED ANTENNAS/EQUIPMENT IMPROVEMENTS

Reference No.	Description	Customer	Height Above Ground (ft.)	Dimensions (ft.)	Weight (lbs)	Power/ Polarization[a]	Purpose
Sutro Tower (cont.)							
17	Second ENG Receive Antenna	KFSF TV	610	5.3 feet in height, 4.7 feet in diameter	200	none-receive only	Add southeast news truck coverage
18	Camera mount	All 6 Local TV news stations	595	Five (5) cameras, each approximately 1.3 feet in height and 1.0 feet in width, mounted on a pipe 10 feet in height and 4 inches in diameter	40	none	Adds mounts for weather coverage to tower south leg
19	Camera mount	All 6 Local TV news stations	590	Five (5) cameras, each approximately 1.3 feet in height and 1.0 feet in width, mounted on a pipe 10 feet in height and 4 inches in diameter	40	none	Adds mounts for weather coverage to tower north leg
20-25	6 Microwave Dish Antennas	BayWEB	550	6.4 feet in diameter, 4.9 feet in depth	200 (each)	~66 dBm	Technology change – public safety agency request
26-40	15 San Francisco Community Broadband Antennas	Department of Technology, City and County of SF	375	1.5 feet in height, 1.4 feet in depth	50 (each)	~47 dBm/ H&V	WiFi for low income San Francisco residents
41	Microwave Dish Antenna	KMTP	187	6.5 feet in diameter, 4.4 feet in depth	400	none-receive only	Adds microwave STL receiver for KMTP
42	Microwave Dish Antenna	KCSM	187	6.5 feet in diameter, 4.4 feet in depth	400	none-receive only	Adds microwave STL receiver for KCSM
43	Microwave Dish Antenna	KREV FM	650	4 feet in diameter, 4 feet in depth	50	none-receive only	Studio to transmitter relay
44	Microwave Dish Antenna for San Francisco-Oakland Bay Bridge camera feed	All 6 TV news stations	187	6.4 feet in diameter, 4.9 feet in depth	200	~62.4 dBm	Technology change – new bridge camera feed for all stations to share
45	Microwave Dish Antenna for San Mateo Bridge camera feed	All 6 TV news stations	187	6.4 feet in diameter, 4.9 feet in depth	200	~62.4 dBm	Technology change – new bridge camera feed for all stations to share
46	Microwave Dish Antenna for Golden Gate Bridge camera feed	All 6 TV news stations	187	3.3 feet in diameter, 1.9 feet in depth	50	~66 dBm	Technology change – new bridge camera feed for all stations to share
47	Microwave Dish Antenna for Richmond-San Rafael Bridge camera feed	All 6 TV news stations	187	6.4 feet in diameter, 4.9 feet in depth	200	~54 dBm	Technology change – new bridge camera feed for all stations to share
48	Microwave Dish Antenna for Dumbarton Bridge camera feed	All 6 TV news stations	187	6.4 feet in diameter, 4.9 feet in depth	200	~66 dBm	Technology change – new bridge camera feed for all stations to share

TABLE 1 (Continued)
PROPOSED ANTENNAS/EQUIPMENT IMPROVEMENTS

Reference No.	Description	Customer	Height Above Ground (ft.)	Dimensions (ft.)	Weight (lbs)	Power/ Polarization[a]	Purpose
Sutro Tower (cont.)							
49	Microwave Dish Antenna for Carquinez Bridge camera feed	All 6 TV news stations	657	6.4 feet in diameter, 4.9 feet in depth	200	~66 dBm	Technology change – new bridge camera feed for all stations to share
50	Microwave Dish Antenna for San Francisco International Airport camera feed	All 6 TV news stations	187	6.4 feet in diameter, 4.9 feet in depth	200	~66 dBm	Technology change – new bridge camera feed for all stations to share
51	Auxiliary FM Antenna (Replacement)	KOIT FM	621	30 feet in height, mounted on a new 30-foot pipe, rototiller style	2,500	35.5 KW/C	Relocate from the tower second level to fifth level for better coverage
Ground Installation							
52	Satellite Dish Antenna (Replacement)	All 11 TV Stations	Ground	42 feet by 22 feet	n/a [b]	none-receive only	New technology – feeds all TV stations for daily and emergency use

NOTE:
[a] For broadcast service, indicated power is effective radiated power (ERP) in kilowatts (kW). For microwave antennas, indicated power is equivalent isotropic radiated power (EIRP) in decibel-milliwatts (dBm). C = circular polarization; E= Elliptical polarization; H = horizontal polarization; V = vertical polarization
[b] Weight not applicable as this antenna would be installed at ground level, and not on Sutro Tower.

SOURCE: Simpson, Gumpertz & Heger, 2013

Hillside Erosion Control and Drainage Improvements

As shown in Figure 3, a number of erosion control improvements would be implemented on the site's southern hillside under the modified project to provide slope stabilization and address soil erosion that has occurred at this location over time. The portion of the southern hillside within the erosion control improvement zone would first be cleared, grubbed and groomed; existing concrete walkways, pads, and base materials within the zone would be removed; and certain heating, ventilation and air conditioning (HVAC), electrical and drainage utilities would either be removed or relocated, as needed. Fifteen existing trees located within the erosion control improvement zone would be retained, and nine blue gum eucalyptus trees (*Eucalyptus globulus*) would be removed (and replaced, as discussed below). The westmost section of the hillside within the erosion control improvement zone (approximately 120 feet in length, and 15 to 20 feet in width) would be re-graded at a ratio of no greater than 2H:1V (horizontal:vertical).

The erosion control improvement zone would then be hydroseeded using a native grass mix, and temporarily irrigated. Fiber rolls and jute netting would be temporarily placed over the planting area for erosion control during this interim period. Upon establishment of vegetation within the erosion control zone, the temporary erosion control features would be removed and a permanent turf reinforcement mat would be installed on the southern hillside. The turf reinforcement mat would consist of a mesh design that would provide erosion control and allow vegetation to grow through the mat. In addition, nine Coast Live oak trees would be planted on the southern hillside. These trees would be staked and hand watered weekly until the trees are established after approximately two years.

Stormwater runoff that would occur on the southern hillside would, depending on location, either drain overland downslope (as at present) or be routed to existing and proposed new 4-inch diameter stormdrains, and hence to 6-inch diameter stormdrains that would discharge to rip-rap lined areas (used for velocity dissipation) located at the property fenceline.

Fenceline Stairway and Walkways

An existing concrete walkway that follows along a portion of the southern hillside slope within the fenceline is used by the site's security personnel for access to, and patrol of, this area. This walkway is currently in poor condition, and existing access to the walkway is difficult due to steep slopes that descend to the walkway. Under the modified project, this walkway would be replaced with a new walkway, and stairways would be installed on either end of the walkway (see Figure 3). Under the modified project, the proposed facilities would be used by the site's security personnel for patrol, and would also allow access to the southern hillside for future landscape maintenance activities. The proposed walkway would be approximately 200 feet in length and 3 feet wide. The proposed stairways would contain hand rails for safety.

Ground-Level Satellite Dish Foundation

As shown in Figure 3, a rectangular concrete pad measuring approximately 31 feet by approximately 22 feet (and area of approximately 680 square feet) would be installed on the site approximately 70 feet south of Sutro Tower to support the proposed replacement ground-level satellite dish (discussed on p. 4, under Antennas/Equipment Additions). The foundation would be approximately 3.5 feet thick, and raised approximately one-half foot above grade.

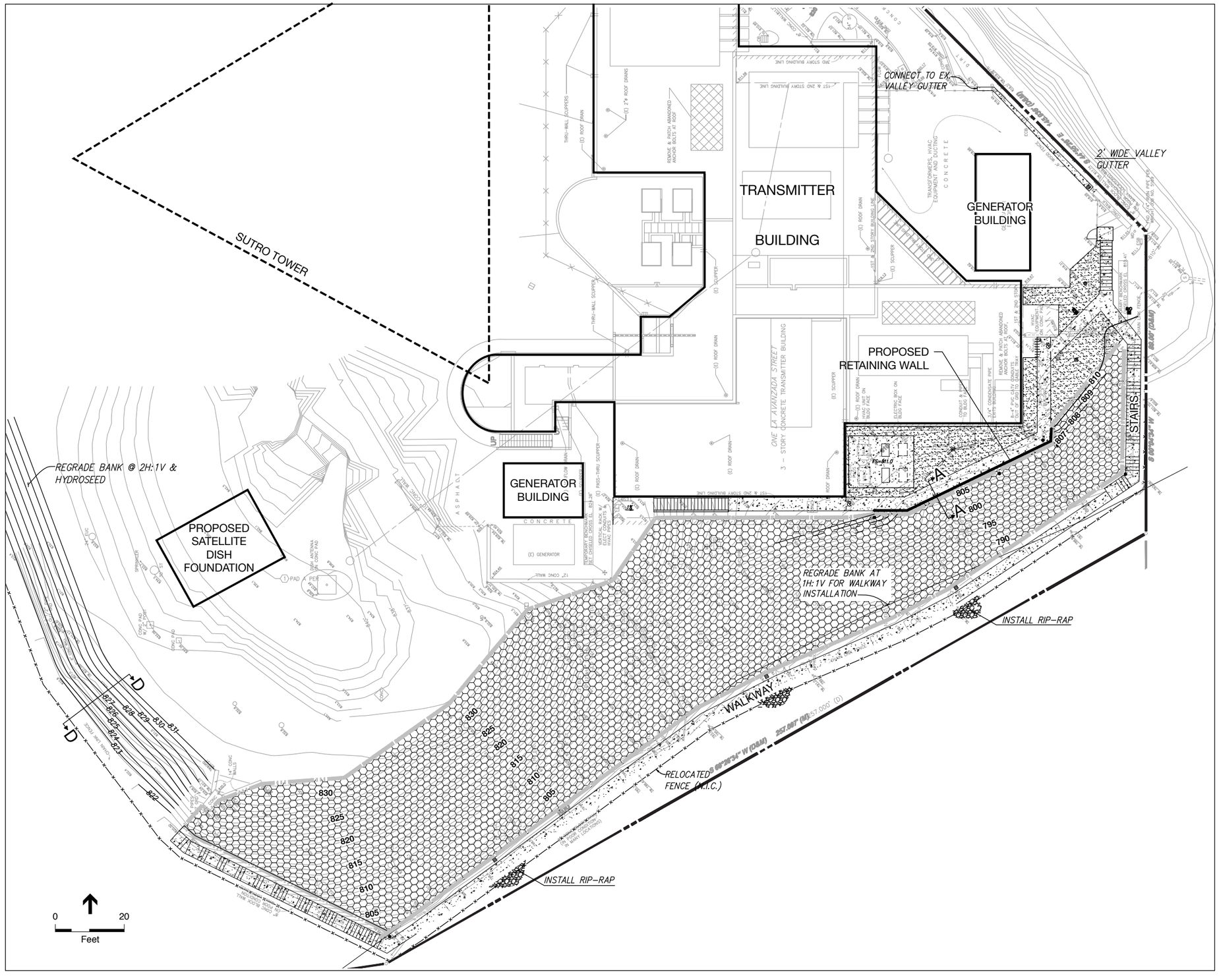

LEGEND:

- CRUSHED GRANITE
- CONCRETE WALKWAY OR FLATWORK
- LIMIT OF PERMANENT TURF REINFORCEMENT MAT MANUFACTURED BY NORTH AMERICA GREEN TYPE VMAX3 SC250. SEE SHEET C-6.1 FOR DETAIL
- PROJECT SITE BOUNDARY
- FENCE LINE
- STAIRS

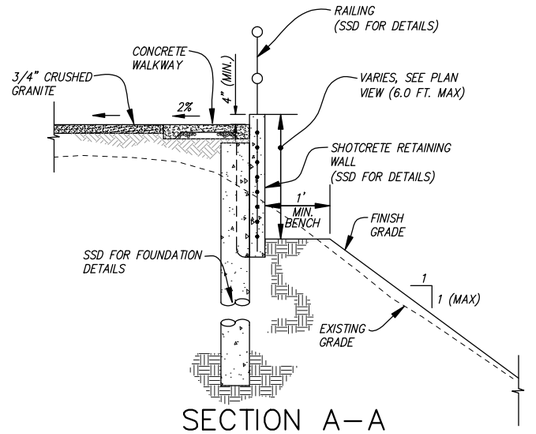

SECTION A–A
TYPICAL RETAINING WALL SECTION
N.T.S.

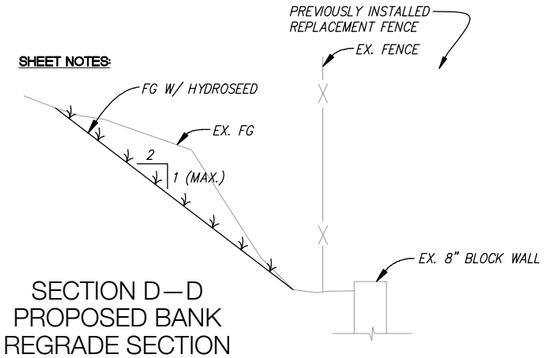

SECTION D–D
PROPOSED BANK REGRADE SECTION
NTS

SOURCE: Simpson, Gumpertz & Heger, 2013

2007.0206E: Sutro Tower Antenna Additions and Site and Erosion Control Improvements

Figure 3
Proposed Grading, Erosion Control and Pedestrian Access Improvements on Site's Southern Hill

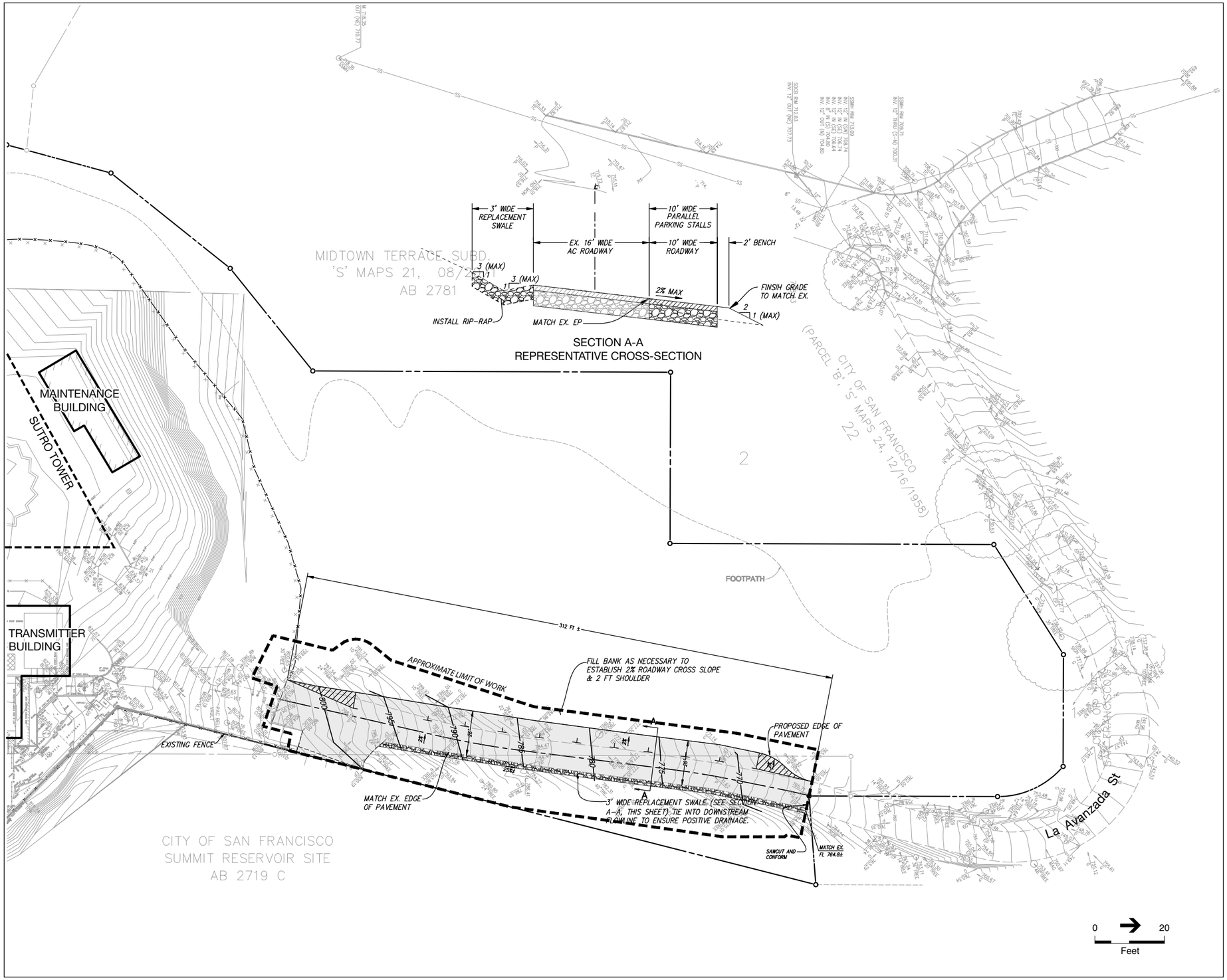

SOURCE: Simpson, Gumpertz & Heger, 2013

2007.0206E: Sutro Tower Antenna Additions and Site and Erosion Control Improvements

Figure 4
Proposed Roadway Improvements on Site's Driveway

Other Miscellaneous Improvements

Other miscellaneous erosion control, drainage and access improvements would be made in the vicinity of the south/southeast side of the transmission building. This would include the placement of crushed granite on currently unpaved/unvegetated areas in this area to reduce erosion. New area drains, catch basins and stormdrains would be installed in this area to collect and convey stormwater to an existing City stormdrain located on-site. Several concrete walkway segments and stairways with handrails would also be constructed to improve security and other operational pedestrian access around this portion of the transmission building.

Driveway Improvements

La Avanzada Street provides vehicular access to the project site. This street is also used by City vehicles for access to its Summit Reservoir (located adjacent to the Sutro Tower property), and is informally used by the public for pedestrian and vehicular access and parking. Roughly, the upper 320 feet of La Avanzada Street (as measured from the site entry gate north) is owned by the project sponsor; the lower section of the street is within the jurisdiction of the City. It is noted that the project sponsor limits parking to one side of the segment of La Avanzada Street owned by the company due to the narrow width of the existing pavement and the current levels of erosion. The pavement on portions of La Avanzada Street is currently in poor condition.

Under the modified project, the driveway extension of La Avanzada Street owned by the project sponsor would be repaved, and widened on the west side of the street to better match the parameters of the original driveway before the occurrence of over 40 years of erosion and to allow for better drainage to avoid erosion in the future. The improved alignment would also allow large vehicles (e.g. fire trucks) to pass safely, and better accommodate the public parking of vehicles, which currently contributes to the erosion of the roadway (see Figure 4). As noted above, the project sponsor currently allows parking, including public parking, only on one side of the driveway extension. Future parking is intended to be limited to the eleven (11) new parking stalls that would be created as part of the modified project. The proposed paved width on this section of La Avanzada Street would be increased from its existing approximate 16-foot width to a proposed 26-foot width. To accommodate this, an area immediately adjacent to La Avanzada Street would be cleared, grubbed and groomed. This would require the removal of four existing blue gum eucalyptus trees within the construction zone. During construction, a stabilized construction entrance and concrete washout basin would be created within the work area and fiber rolls would be temporarily placed within the construction zone to provide erosion control.

An existing swale along the east side of this segment of La Avanzada Street would be replaced with a new 3-foot-wide swale lined with rip rap to improve drainage at this location, and the west side of La Avanzada Street would contain a two-foot unpaved shoulder beyond the edge of pavement. La Avanzada Street would have a slight cross-grade (2 percent or less) to direct stormwater that occurs on the roadway to runoff to the west and downslope.

Construction Characteristics

Antennas/Equipment Additions

Project construction for the proposed tower improvements is anticipated to commence upon project approval, and the majority of these improvements would be installed intermittently over a six- to nine-month period, with each tenant installation typically completed within a two week period using a three- to

four-person crew. While the project sponsor plans to stage the work, there exists the potential for overlapping activities and, thus, the potential for between five to fifteen workers at the site on any given construction day. Project construction equipment would include the use of hydraulic cranes, a forklift and skid wench. Physical attachment of each improvement to Sutro Tower would be in the same manner that antennas have been attached to the tower since it was constructed: trained installers physically climb to the particular installation point on the tower and hand install each attachment with handheld air-powered wrenches. Total deliveries of materials for this project component are estimated at approximately five large truck round-trips, and 20 to 30 smaller delivery (e.g. UPS, FedEx) truck round trips.

Proposed Auxiliary Antenna Operational Limitations During Construction

During periods of construction of the proposed tower improvements when the tower's main antenna(s) would be temporarily out of service, one or more of the tower's auxiliary antennas for the corresponding radio or TV station(s) would be temporarily used. Since the tower's auxiliary antennas emit more ground-level radio frequency radiation (RFR) than its main antennas, during construction of tower improvements for the modified project, the sponsor would limit the operation of the tower's auxiliary antennas such that the total ground-level RFR exposure would be less than or equal to 15 percent of the Federal Communications Commission (FCC) public maximum permissible exposure limit (MPE) for any publicly accessible location (the same RFR exposure estimated for the 2008 project). Additional detail on RFR, including applicable regulations and project effects, are discussed in detail below, in the Radio Frequency Radiation section of this EIR Addendum.

Other Site Improvements

The proposed site and erosion control improvements are anticipated to be conducted outside of the rainy season, and would take approximately four months to complete. The number of daily construction workers at the site would vary depending on activity, but could range between eight and ten workers on peak days. Project construction equipment would include the use of excavators, loaders, backhoe, grinder, skid steers, blade, paver, and rollers. Total deliveries of materials (e.g., base and drain rock, organic materials, concrete, asphalt) for this project component are estimated at up to approximately 70 large truck round-trips. All soil excavated on-site would be re-used on-site, and consequently would not require off-hauling. The proposed repaving and widening of the site driveway would occur during the last two weeks of the ground improvements schedule.

Approvals Required

Communication facilities such as Sutro Tower are conditionally permitted in an RH-1(D) district as "Public Facilities and Utilities" under Planning Code Section 209.6. Because the modified project does not include major remodeling of the tower, expansion of the transmitter building at the base of the tower, or a change in use, an amendment to the existing conditional use authorization would not be required for the modified project. However, pursuant to City Planning Commission Resolution No. 11399, adopted July 14, 1988, the Planning Commission will hold a public hearing to review the modified project under its Discretionary Review authority. The project would not increase the height or bulk of the tower; thus, the modified project would be consistent with the height and bulk controls, as it would not change the height of a legally noncomplying structure.

Every Sutro Tower building permit since 2000 has been subject to a series of "Standard Sutro Tower Conditions" imposed by the Planning Commission, which require mandatory structural inspections,

monitoring of RFR, and communications with neighborhood organizations. The modified project would require a building permit from the San Francisco Department of Building Inspection (DBI) for the proposed tower antenna additions and site and erosion control improvements. The project may also require building and electrical permits to allow the project sponsor's tenants to make improvements to their leased space to accommodate the described antenna and accessory equipment or to alter, replace, or add accessory and ancillary equipment.

ANALYSIS OF POTENTIAL ENVIRONMENTAL EFFECTS

San Francisco Administrative Code Section 31.19(c)(1) states that a modified project must be reevaluated and that "if, on the basis of such reevaluation, the Environmental Review Officer determines, based on the requirements of CEQA, that no additional environmental review is necessary, this determination and the reasons therefore shall be noted in writing in the case record, and no further evaluation shall be required by this Chapter."

CEQA Guidelines Section 15164 provides for the use of an addendum to document the basis of a lead agency's decision not to require a Subsequent or Supplemental EIR for a project that is already adequately covered in an existing certified EIR. The lead agency's decision to use an addendum must be supported by substantial evidence that the conditions that would trigger the preparation of a Subsequent EIR, as provided in CEQA Guidelines Section 15162, are not present.

The FEIR evaluated the potential impacts of construction and operation of the 2008 project and found that all impacts would be less than significant with implementation of a mitigation measure (FEIR Mitigation Measure No. 1, Construction Air Quality). Since certification of the FEIR, no changes have occurred in the circumstances under which the modified project would be implemented that would change the severity of the project's physical impacts as explained herein, and no new information has emerged that would materially change the analyses or conclusions set forth in the FEIR.

The 2008 project did not include any ground-level improvements and, as discussed above, under the modified project, certain ground level site improvements are proposed. However, as demonstrated below, even with the proposed tower and site improvements, the modified project would not result in any new significant environmental impacts, substantial increases in the significance of previously identified effects, or necessitate implementation of additional or considerably different mitigation measures than those identified in the FEIR. Furthermore, the single mitigation measure identified for the 2008 project (FEIR Mitigation Measure No. 1, Construction Air Quality) has since been largely adopted as part of a City ordinance, commonly referred to as the Construction Dust Control Ordinance, which would apply to the modified project; consequently, no mitigation measures are required for the modified project. The effects associated with the modified project would be substantially the same as those reported for the 2008 project in the FEIR. The following discussion provides the basis for this conclusion.

Aesthetics

Summary of Aesthetic Effects of 2008 Project in FEIR

The FEIR discussed existing views of the project site from surrounding public vantage points, described the visibility of the tower from these off-site locations and how existing vegetation in the site vicinity serves to partially screen views of on-site buildings. The FEIR then addressed potential aesthetic impacts

of the 2008 project and determined that the project would not substantially degrade the existing visual character of the site and its surroundings. This determination was made on the basis that the proposed change in tower antennas or their reconfiguration would not be generally noticeable, except from relatively close inspection. The FEIR (in the project's Initial Study) also determined the project would have a less than significant aesthetic impact on scenic vistas and scenic resources, and would have no impact on light and glare.

Short-Term Aesthetic Effects During Construction of the Modified Project

The tower and ground-level improvements proposed under the modified project would have the potential to result in short-term aesthetic effects during construction. Construction activities would include the daily arrival and departure of construction workers, truck deliveries of construction materials to, and hauling of debris from, the site, and various construction activities that would occur on-site. Construction activities associated with the tower improvements under the modified project would be visible from off-site locations, and would be similar in scale and nature to the prior antennas/equipment alterations that have occurred on the tower under the 2008 project. Depending on location, many of the proposed ground-level construction activities would be either partially or fully screened from view from nearby residences due to the existing topography and/or presence of intervening vegetation. Given the temporary nature of the proposed construction, no long-term aesthetic effects would be associated with these construction activities. Accordingly, these short-term aesthetic effects associated with the modified project would be substantially similar to the effects described in the FEIR, and would not result in new significant impacts or substantially more severe significant impacts than were identified in the FEIR or require new mitigation not previously discussed in the FEIR.

Long-Term Aesthetic Effects Associated With Antennas/Equipment Additions Proposed under Modified Project

Similar to the tower improvements proposed under the 2008 project, the additional antennas/equipment proposed under the modified project would not be generally noticeable. **Figure 5** presents an existing view and a visual simulation of the tower from the Twin Peaks overlook, looking west. **Figure 6** presents an existing view and a visual simulation of the tower from Johnstone Drive, across Clarendon Avenue, looking south. As described in the Project Description, the modified project would result in the addition of 50 new broadcast and reception antennas, microwave dish antennas and camera mounts at various levels on the tower, and replacement and relocation of one existing auxiliary radio antenna to a higher level on the tower. The new antennas/equipment would be distributed across multiple levels on the tower (at elevations between 187 feet above ground and 815 feet above ground). The six largest new antennas (main broadcast, auxiliary and emergency antennas) would be placed below Level 4 (525 feet above ground), below Level 5 (621 feet above ground) and atop Level 6 (at 762, 800, and 815 feet above ground, respectively); see Table 1 for proposed antenna dimensions.

Each of other proposed new antennas would be individually smaller, although some of these new antennas would be grouped, such as the 15 Community Broadband antennas at Level 3 (375 feet above ground), 6 ENG antennas near Level 5 (610 to 670 feet above ground), and 6 BayWEB antennas below Level 4 (550 feet above ground).

As shown in Figures 5 and 6, the additional antennas and equipment proposed under the modified project would not result in a substantial visual change. While the additional antennas/equipment would be noticeable upon relatively close inspection when in proximity to the tower, from longer range views, these



Simulation does not reflect proposed ground improvements, including new retaining wall, hillside erosion control, driveway widening, or tree removal/replacement.

SOURCE: Previsualists, Inc., 2013

2007.0206E: Sutro Tower Antenna Additions and Site and Erosion Control Improvements

Figure 5
Photosimulation of View Looking West from Twin Peaks



Simulation does not reflect proposed ground improvements, including new retaining wall, hillside erosion control, driveway widening, or tree removal/replacement.

SOURCE: Previsualists, Inc., 2013

2007.0206E: Sutro Tower Antenna Additions and Site and Erosion Control Improvements

Figure 6
Photosimulation of View Looking North from Johnstone Drive, across Clarendon Avenue

installations would not be noticeable, as these elements would blend in with the tower's main structural elements. As under the 2008 project, all new antennas/equipment proposed under the modified project would be composed of non-reflective metal (unpainted) or be painted the same color as the existing tower structure and antennas to blend in with the existing facility.

The new ground-level satellite dish would replace an existing ground-level satellite dish located in proximity to the satellite dish that would be removed. The proposed new ground-level satellite dish would be partially visible from certain off-site vantage points, although it would be screened by the existing topography and/or intervening vegetation. This dish would contain a factory coating and consequently, would not require painting. Proposed new tree plantings on the southern hillside would further serve to screen views of the ground-level satellite dish from off-site locations. Accordingly, this new feature would not result in a substantial change in visual character of the site vicinity.

Long-Term Aesthetic Effects Associated With Other Site Improvements Proposed under Modified Project

The majority of permanent ground-level improvements proposed under the modified project would address existing adverse on-site hillside erosion problems, and improve an existing driveway and walkways that are currently in poor physical condition. In particular, the proposed erosion control improvements could be considered an aesthetic improvement over existing conditions, as existing on-site hillside slopes that currently exhibit visible damage from soil and vegetative loss would be repaired, and vegetative cover would be increased on-site. Regardless, most of these improvements would be either partially or fully screened from view from nearby residences due to the existing topography and/or presence of interceding vegetation. While 13 on-site eucalyptus trees would be removed under the modified project, 9 new Coast Live oak trees would planted within the project property which, when mature, would further serve to screen views of the project site from off-site locations. Given the relatively dense eucalyptus forest surrounding the project site (as shown in Figure 5), the removal of 13 eucalyptus trees would not be noticeable from long range vantage points.

Aesthetics Conclusion

The FEIR did not identify any significant effects related to aesthetics. The improvements proposed under the modified project would not result in new significant aesthetic impacts not identified in the FEIR and would not substantially increase the severity of any previously identified significant impact, nor would new mitigation measures be required. No new information has arisen, nor have there been any changes in circumstances, such that the modified project would result in new or substantially more severe significant impacts related to aesthetics, including effects on visual character, scenic vistas, scenic resources, and light and glare, either individually or cumulatively.

Geology, Soils and Seismicity

Summary of Geologic, Soil and Seismic Effects of 2008 Project in FEIR

The FEIR described existing geologic, soil and seismic conditions at the project site. The FEIR reported that the project site is not within an Alquist-Priolo Earthquake Fault Zone, and that no known active fault exists on the project site or in the vicinity, and consequently, that the risk of ground rupture at the site is very low. In addition, the FEIR also reported that the project site is underlain by soil types that 1) are not expected to contribute greatly to shaking amplification in the event of an earthquake; 2) have a very low liquefaction hazard level; and 3) do not contain high expansive soil potential. The FEIR also reported that

the relatively flat portion of the site that supports the Sutro Tower foundation is not within a seismic hazard zone; however, an area southwest and down slope of the tower is mapped as being within an area susceptible to seismically induced landslides.

The FEIR summarized a seismic and structural analysis completed by the project sponsor in 2008 in support of the project. Based on the analysis, structural upgrades proposed as part of the 2008 project, and since completed in 2011, included:

- Strengthening of one of three columns on each of the three tower legs above tower Level 3 by bolting new steel plates to the columns, and replacing "splice plates"[5] between lengths of each of the columns with higher-strength plates, at two locations between Levels 1 and 2 and at one location above Level 3;

- Upgrading bolted connections to welded connections on the Level 6 horizontal "outriggers"[6] that anchor guy wires supporting the vertical masts atop the tower, adding welded steel tabs where these same horizontal trusses connect to the tower legs, and adding welded L-shaped steel angles to the same trusses at certain locations between the tower legs; and

- Replacement of bolted connections with welded connections, along with the addition of "stiffener plates"[7] to existing triangular "gusset plates,"[8] on existing diagonal braces within the tower legs, at various locations between grade and tower Level 2, between Levels 2 and 3, and between Levels 5 and 6.

The FEIR reported that these structural upgrades would enable Sutro Tower to meet all applicable *Building Code* wind and seismic criteria for an essential facility and accommodate the additional antenna improvements, and concluded that the proposed project would result in a less than significant impact to seismic groundshaking, including catastrophic failure.

The FEIR also reported that because the tower is anchored to its foundation, and the increase in total mass would be relatively small, the 2008 project would not be expected to alter the current slope stability. The FEIR concluded that since the tower is not on a geologic unit that is unstable, or would become unstable as a result of the project, that the project would not result in landslides, lateral spreading, subsidence or collapse. Consequently, the FEIR found that all project impacts to geology, soils and seismicity from the proposed tower improvements would be less than significant.

Geologic, Soil and Seismic Impacts of the Tower Improvements Proposed under the Modified Project

In 2013 a structural analysis was prepared for the additional antennas and equipment that would be added to Sutro Tower under the modified project.[9] The structural analysis included modeling of the existing tower, including recent structural upgrades completed as part of the 2008 project, along with the additional antennas and equipment proposed on the tower under the modified project. The 2013

---

5 "Splice plates" are metal plates laid over a joint and fastened to the pieces being joined. They are used to join long steel beams into one continuous longer beam as required by the design.

6 "Outriggers" are those portions of the horizontal trusses that extend beyond the tower legs.

7 "Stiffener plates" are metal plates attached to a beam used to increase the beam's stiffness and thereby its resistance to buckling.

8 "Gusset plates" are steel plates, typically rectangular or triangular in shape, that are welded to a beam fastened to other members to make a truss.

9 *Addition of Broadcast Equipment to Sutro Tower, Structural Seismic Analysis Report*, Simpson, Gumpertz & Heger, April 10, 2013. This document is on file and available for review at the Planning Department, 1650 Mission Street, Suite 400, as part of Case File 2007.0206E.

structural analysis report determined that with the additional antennas and equipment proposed as part of the modified project, the tower would continue to meet all applicable *Building Code* wind and seismic criteria for an essential facility, and that no additional structural upgrades would be required for Sutro Tower beyond those already completed as part of the 2008 project. The proposed tower improvements would be subject to review and approval by DBI to ensure all *Building Code* provisions are met. Consequently, consistent with the conclusions reached in the FEIR, the tower improvements proposed under the modified project would result in a less than significant impact from seismic groundshaking, including catastrophic failure, and no new significant impacts would ensue as a result of the modified project, compared to those analyzed in the FEIR. Similarly, the proposed tower improvements would not affect any conclusions previously reached in the FEIR regarding landslides, lateral spreading, subsidence or collapse.

Geologic, Soil and Seismic Impacts of the Site and Erosion Control Improvements Proposed under the Modified Project

As described in the Project Description, aside from the tower improvements, a number of proposed ground-level site improvements would be constructed on the project site property, including the installation of a retaining wall southeast of the transmission building; implementation of a number of on-site erosion control and drainage improvements on the site's southern hillside; installation of several exterior stairways and walkways; repair and replacement of a portion of the existing driveway; and installation of an at-grade satellite dish antenna and foundation. Project-related ground-level construction activities, such as clearing, grading and excavation, could temporarily create conditions in which soils are more susceptible to erosion by wind or stormwater runoff. However, as discussed in more detail under Hydrology and Water Quality, below, the SFPUC would require that the project sponsor develop and implement an erosion and sediment control plan to reduce the impact of runoff from a construction site. This plan would be reviewed and approved by SFPUC prior to implementation, and the SFPUC would conduct periodic inspections to ensure compliance with the plan. As discussed in the Project Description, during construction, soil stabilization controls would be implemented in work areas where ground disturbance would occur, including hydroseeding and use of fiber rolls and/or jute netting, depending on location. With implementation of an erosion and sediment control plan, potential impacts related to soil erosion during this interim period would be less than significant, and would not be substantially more severe than those identified in the FEIR.

Certain site improvements proposed along the southern hillside, including the proposed retaining wall and erosion control and drainage improvements, and exterior stairways and walkways are located within an area mapped in the *General Plan* Community Safety Element (Map 5) as susceptible to seismically-induced landslides. The proposed installation of a retaining wall, grading improvements and implementation of site erosion controls on the southern hillside are specifically designed to provide slope stabilization and address soil erosion that has occurred at this location over time. As described in the FEIR, the *Building Code* contains requirements for new and replacement construction. The final site plans would be submitted to and reviewed by the DBI. In reviewing plans, DBI refers to a variety of information sources to determine existing hazards and assess requirements for mitigation. Potential geologic hazards would be addressed during the permit review process through these measures. To ensure compliance with all *Building Code* provisions regarding structural safety, when DBI reviews any geotechnical reports or building plans submitted for a proposed project, it will determine the adequacy of necessary engineering and design features to reduce the potential damage to structures from ground shaking and geologic hazards. Therefore, potential damage to structures from geologic hazards on the project site would be ameliorated through any DBI requirement for a geotechnical report and review of

the building permit application. Accordingly, the modified project would not result in new significant impacts not previously analyzed in the FEIR.

Geology, Soils and Seismicity Conclusion

The FEIR did not identify any significant effects related to geology, soils and seismicity. The improvements proposed under the modified project would not result in new significant geology, soils, or seismicity impacts not identified in the FEIR and would not substantially increase the severity of any previously identified significant impact, nor would new mitigation measures be required. No new information has arisen, nor have there been any changes in circumstances, such that the modified project would result in new or substantially more severe significant impacts related to geology, soils and seismicity, including from earthquakes and seismic related hazards, an unstable geologic unit or soils, and soil erosion, either individually or cumulatively.

Radio Frequency Radiation (RFR)

Summary of RFR Effects of 2008 Project in FEIR

The Federal Communications Commission (FCC) has adopted maximum permissible exposure limits (MPE) for radio frequency radiation (RFR) that vary by frequency of the RFR emitted, and has established separate MPE limits for worker exposure and public exposure.[10] The FEIR indicated that Sutro Tower emits radio frequency waves with a range of 54-788 megahertz (MHz).[11,12] The FEIR reported that during normal main antenna operation, the total measured maximum existing ambient RFR exposure level at ground level for any publicly accessible location around Sutro Tower was 8.5 percent of the public MPE, well within acceptable FCC exposure limits.[13]

The FEIR evaluated three project scenarios (construction phase using main and auxiliary antennas, normal operation using the main antennas, and an unlikely theoretical scenario of use of all auxiliary antennas operating simultaneously). The FEIR reported that during construction of the 2008 project, there would be periods when the RFR ground level exposure level would be temporarily higher than under existing conditions (i.e., up to 15.3 percent of the public MPE) for any publicly accessible location, but well within acceptable FCC exposure limits. The FEIR also reported that during normal operation, the 2008 project would reduce the RFR exposure level of the digital TV and FM station main antennas from existing conditions (i.e., a reduction from 8.5 to 8.4 percent of the public MPE) for any publicly accessible location, and consequently, exposures would also be well within acceptable FCC exposure limits.[14] For the theoretical scenario that assumed simultaneous use of all auxiliary antennas, the FEIR explained that, as under existing conditions, continued compliance by Sutro Tower, Inc. and all tenant stations with the

---

[10] Additional information on MPE limits is presented in *Sutro Tower Inc., San Francisco, California, Statement of Hammett & Edison Consulting Engineers, FCC Radio Frequency Protection Guide Exhibit*, Hammett & Edison, Inc., September 22, 2014. This document is on file and available for review at the Planning Department, 1650 Mission Street, Suite 400, as part of Case File 2007.0206E.

[11] Radio frequency is expressed in hertz (Hz). A kilohertz (kHz) is one thousand hertz; a megahertz (MHz) is one million hertz; a gigahertz (GHz) is 1 billion hertz. Radio frequencies are considered to be in a range of 300 kHz to 300 GHz.

[12] This radio frequency wave range is consistent with the range currently emitted by Sutro Tower, measured at 88-700 MHz.

[13] This assumed simultaneous operation of all antennas on the tower, including smaller scale antennas and accessory equipment located at the Sutro Tower site, and consequently, existing RFR exposure levels were conservatively estimated.

[14] An incremental reduction in the estimated existing 2008 RFR exposure level as a result of the 2008 project was due to a reconfiguration of television antennas.

"Table of Contributions" procedures would ensure that the cumulative operation of auxiliary antennas during construction and operation at the site under the 2008 project would stay within the public MPE.[15]

The FEIR also determined that since RFR levels decline rapidly with increased distance, the 2008 project RFR levels at the nearest school (Clarendon Elementary School, located one-eighth mile from the tower) would be even lower than the acceptable values reported for locations much closer to Sutro Tower. The FEIR concluded the 2008 project would have a less than significant impact to nearby schools with regard to RFR emissions.

In addition, the FEIR also reported that Sutro Tower is subject to a mandatory RFR measurement program (as part of the Standard Antenna Conditions originally adopted in 2000). The mandatory RFR measurement program currently requires the project sponsor to measure RFR public exposure levels at 200 publicly accessible sites within 1,000 feet of the tower every three years, within two weeks of the activation of any digital to television (DTV) broadcasting antenna, or within two weeks of any increase in power from any DTV antenna's initial power level, whichever is earliest.[16] The project sponsor is required to submit those measurements to the Department of Public Health (DPH), the Planning Department, and designated liaisons for local neighborhood associations (the results are also posted on the project sponsor's website). Such measurements provide analytical data to ensure that RFR exposure from tower operations is protective of human health at the project site and vicinity during construction and operation.

While not a hazards-related issue, the FEIR also determined that since the 2008 project would reduce RFR exposure levels during operation, any potential radio interference with consumer devices in residences in the surrounding neighborhood during operation of the 2008 project would be less than under existing conditions, and furthermore, that the minor increase in RFR exposure levels during construction would not be great enough to result in an increase in interference of consumer devices.

RFR Impacts of the Modified Project

The project sponsor's consultant, Hammett and Edison, Inc., conducted a supplemental analysis to determine RFR exposure of the modified project.[17,18] As was the case for the analysis of the 2008 project, the analysis of the modified project conservatively estimates RFR exposure levels, and consequently, overstates results. Similar to the FEIR, this EIR Addendum evaluates 1) a construction phase using main and auxiliary antennas, 2) normal operation using the main antennas, and 3) an unlikely theoretical scenario of use of all auxiliary antennas simultaneously.

---

[15] Ground level RFR for operation of auxiliary antennas is higher than for the main antennas, due to their lower height installation and the broad elevation plane patterns in which they emit. The "Table of Contributions" is a set of engineering formulae and procedures developed by Sutro Tower, Inc. that identifies the maximum power limit for each auxiliary antenna, describes each radio frequency contribution to cumulative conditions at different power levels, and indicates how each station must reduce auxiliary antenna or auxiliary power levels as needed to ensure the cumulative operation of these antennas do not exceed FCC public MPE.

[16] The FEIR referenced the version of the RFR measurement program that was in effect at the time the FEIR was certified. Revisions agreed to shortly thereafter require that the noted RFR measurements be conducted within two weeks (rather than within six months) after activation of a DTV broadcasting antenna or an increase in power from any DTV antenna's initial power level.

[17] *Sutro Tower Inc., San Francisco, California, Statement of Hammett & Edison Consulting Engineers*, Hammett & Edison, Inc., September 22, 2014. This document is on file and available for review at the Planning Department, 1650 Mission Street, Suite 400, as part of Case File 2007.0206E.

[18] *Sutro Tower Inc., San Francisco, California, Statement of Hammett & Edison Consulting Engineers*, *Supplemental Report*, Hammett & Edison, Inc., September 26, 2014. This document is on file and available for review at the Planning Department, 1650 Mission Street, Suite 400, as part of Case File 2007.0206E.

RFR Impacts During Construction Phase

As discussed in the Project Description, during construction of the tower improvements for the modified project, the project sponsor would limit the operation of the tower's auxiliary antennas such that the total ground-level RFR exposure, as conservatively estimated, would be less than or equal to 15 percent of the public MPE for any publicly accessible location.[19] Such exposure would occur at Summit Reservoir, immediately east of the tower site; the greatest exposure level at nearby residences would be less than 10 percent of the public MPE. As such, the modified project would generate RFR at the same level as, or less than, that which was generated by the 2008 project during construction, and moreover, well within acceptable FCC exposure limits. Furthermore, as with the 2008 project, under the modified project, to protect worker health and safety, operational measures are in place to restrict access to on-tower areas that would exceed the occupational exposure limit, and to ensure that if access to the tower above ground level is required, steps are taken, if necessary, to switch operations to an applicable main or auxiliary antenna and/or to reduce power to appropriate levels in antennas located in proximity to planned work.[20] These measures would ensure worker safety during the construction period for the modified project and maintain RFR levels in publicly accessible areas well below the public exposure limit.

RFR Impacts During Normal Operation

During normal operation, the modified project would result in a conservatively estimated RFR exposure level of 6.2 percent of the public MPE for any publicly accessible location, also well within acceptable FCC exposure limits. It should be noted that this exposure level is less than what was estimated for both existing 2008 conditions and 2008 project conditions in the FEIR, even though the total number of FM and TV stations at Sutro Tower under the modified project would be higher than in 2008. This circumstance is due to the availability of more refined data from the manufacturer for the existing antennas, which when considered along with applicable data for proposed antennas, allowed for more accurate estimates of the combined RFR exposure to be developed.

RFR Impacts During the Theoretical Scenario

For the theoretical scenario that assumed simultaneous use of all auxiliary antennas, as was the case with the 2008 project, continued compliance by Sutro Tower, Inc. and all tenant stations with the "Table of Contributions" procedures under the modified project would ensure that the cumulative operation of auxiliary antennas during operation at the site would remain within the public MPE.

RFR Impacts in Any of the Above-Described Scenarios

As was the case with the 2008 project, since RFR levels decline rapidly with increased distance, the modified project RFR levels at Clarendon Elementary School would be even lower than the acceptable values estimated for locations much closer to Sutro Tower. Accordingly, the modified project would have a less than significant impact to nearby schools with regard to RFR emissions.

As under the 2008 project, under the modified project, Sutro Tower would also continue to be subject to the mandatory RFR measurement program (as part of the Standard Antenna Conditions originally

[19] To accomplish this, the auxiliary antenna effective radiated powers would be restricted to certain designated power levels. These levels were established by Hammett & Edison in 2007 for each television broadcaster on the tower. The individual power limitations applicable to each auxiliary broadcast antenna during the tower improvements construction phase would be directly monitored by the project sponsor to ensure compliance pursuant to terms and conditions in the license agreement entered into with each television broadcaster.

[20] Guidelines for ensuring that on-tower worker exposure remains within applicable FCC exposure standards are contained in *Sutro Tower, Inc. San Francisco, California, Statement of Hammett & Edison Consulting Engineers,* January 11, 2011.

adopted in 2000) that currently requires the project sponsor to measure RFR public exposure levels at 200 publicly accessible sites within 1,000 feet of the tower every three years or within two weeks after the activation of any DTV broadcasting antenna or an increase in power from any DTV antenna. These measurements are then submitted to DPH and to the Planning Department and provide analytical data to ensure that RFR exposure from tower operations is protective of human health at the project site and vicinity during construction and operation.

In addition, while not a hazards related issue, since RFR exposure levels during the operation of the modified project are estimated to be lower than those estimated during the operation of the 2008 project, any potential radio interference with consumer devices in residences in the surrounding neighborhood during operation of the modified project would be less than that estimated for the 2008 project. Furthermore, the minor increase in RFR exposure levels during construction under the modified project would be similar to that estimated for the 2008 project, and not great enough to result in an increase in interference of consumer devices.

RFR Conclusion

The FEIR did not identify any significant effects related to RFR. The antennas and equipment additions proposed under the modified project, when considered in conjunction with existing frequency sources at Sutro Tower, would result in RFR levels that would be well within the FCC maximum permissible exposure levels. Consequently, the modified project would not result in new significant impacts related to RFR emissions not identified in the FEIR and would not substantially increase the severity of any previously identified significant impact, nor would new mitigation measures be required. No new information has arisen, nor have there been any changes in circumstances, such that the modified project would result in new or substantially more severe significant impacts related to RFR emissions, either individually or cumulatively.

Risk of Fire

Summary of Risk of Fire Effects of 2008 Project in FEIR

The FEIR described the presence of forested areas within the project site and adjacent areas, and summarized existing fire protection services and emergency water availability in the project vicinity. The FEIR also discussed existing vegetation management measures that the project sponsor implements on an on-going basis to minimize fire risk on the project site. The FEIR analyzed potential project construction-phase impacts associated with the risk of fire (e.g., from welding), and concluded that with the adherence to Sutro Tower's safety plan during construction, and continued implementation of the project sponsor's on-going vegetation management practices at the site, the project impacts to public safety from risk of fire would be less than significant.

Fire Risk Impacts of the Modified Project

As a follow-up to previous site inspections conducted by the San Francisco Fire Department (SFFD) in 2008, SFFD staff inspected the project site on January 14, 2014, to assess the relative fire risk to the tower from existing on-site vegetation. The SFFD's inspection indicated that the majority of trees surrounding the tower were set back more than 30 feet from the tower (with the exception of a few tree branches), and that shrubs and weeds had been largely cleared by the project sponsor from around these trees. The SFFD

also noted certain existing tower features that provide exposure protection from fire, including architectural cladding that encloses the tower's legs and trusses below the 5th level.[21]

Under the modified project, the construction-related risk of fire effects related to the installation of additional tower antennas and equipment improvements would be similar to those effects previously discussed for the 2008 project in the FEIR. The proposed site and erosion control improvements under the modified project would further increase the amount of construction equipment and activities on the project site. However, as under the 2008 project, the construction contractor would be required to adhere to Sutro Tower's safety plan during construction. The safety plan measures include, but are not limited to, having trained crewmembers assigned to continuously monitor the surrounding area for fire; ensuring the fire monitor maintains two-way radio contact with work crews in the construction work areas to notify them of any fire danger; use of welding blankets to contain sparks and slag; and provision of fire extinguishers.

The proposed on-site access improvements, including widening and paving of La Avanzada Street, and new exterior on-site walkways and stairways along the southern hillside, would serve to improve overall access for emergency response personnel to and within the site. Furthermore, the sponsor would continue to implement its existing vegetation management measures on an on-going basis to minimize fire risk on the project site, consistent with the recommendations of the SFFD. Consistent with these recommendations, this includes, but is not limited to, maintaining a 30-foot separation between shrubs and all elements of the tower; maintaining several access trails across the property to ensure that SFFD has emergency access; regularly trimming shrubs and brush to keep access trails open; removing dead wood from trees; periodically thinning or cutting trees back within the fence line; and inspecting access trails and trees within the fence line on a daily basis to monitor on-going fire safety and on-site security.[22] All proposed replacement trees would similarly be set back at least 30 feet from the tower.

Risk of Fire Conclusion

The FEIR did not identify any significant effects related to risk of fire. With adherence to Sutro Tower's safety plan during construction, and continued implementation of the sponsor's on-going vegetation management practices at the site, the modified project would not result in new significant impacts to public safety from risk of fire during construction and operation and would not substantially increase the severity of any previously identified significant impact, nor would new mitigation measures be required. No new information has arisen, nor have there been any changes in circumstances, such that the modified project would result in new or substantially more severe significant impacts related to risk of fire, either individually or cumulatively.

Biological Resources

Summary of Biological Resource Impacts of 2008 Project in the FEIR

The FEIR reported (in the project Initial Study) that due to the project site's developed nature and location, the 2008 project would have no effect on any riparian habitat or sensitive community, federally protected wetlands or adopted conservation plan. The FEIR also reported that, since the tower improvements proposed under the 2008 project were limited to a previously disturbed area within the site property and would not involve any ground disturbance, the 2008 project would not affect any rare

[21] San Francisco Fire Department, letter to Cooper, White & Cooper LLP, January 16, 2014. This document is on file and available for review at the Planning Department, 1650 Mission Street, Suite 400, as part of Case File 2007.0206E.

[22] Ibid.

plant or animal habitats, or any rare, threatened or endangered species. The FEIR also determined that given the minor changes the 2008 project would make to the tower, it would not increase the potential for avian bird impacts with respect to the tower. Accordingly, the FEIR concluded that the 2008 project would not result in any significant impacts to biological resources.

Reconnaissance Survey of Existing Site Conditions

In support of the EIR Addendum for the modified project, biological resources within the project site were verified by an Environmental Science Associates (ESA) biologist through field reconnaissance conducted on October 2, 2013. Prior to the reconnaissance survey, a review of federal and State wildlife and plant database queries was conducted for the project site and surrounding area. The field reconnaissance consisted of visual observations within the project site boundary and of the adjacent environments. The field survey focused on identifying vegetation communities and habitat within the project site that could support special-status plant and wildlife species.

The area of the proposed erosion control zone on the southern hillside within the project site contains several blue gum eucalyptus (*Eucalyptus globulus*) trees. Ground cover in this area includes substantial eucalyptus leaf litter on slopes beneath the tree canopy, and grass and weedy species covering the open flat area at the top of the slope including, but not limited to, wild oats (*Avena barbata*), soft chess (*Bromus hordeaceus*), Italian ryegrass (*Festuca perennis*), bristly ox-tongue (*Helminthotheca echioides*), cheeseweed (*Malva parviflora*), buckhorn plantain (*Plantago coronopus*) and nightshade (S*olanum* sp.).

The area of the proposed improvements on La Avanzada Street within the project site contains several blue gum eucalyptus trees, and minimal road shoulder vegetation consisting of English ivy (*Hedra helix*), Himalayan blackberry (*Rubus armeniacus*), German ivy (*Delairea odorata*), nasturtium (*Tropaeloum majus*), native poison oak (*Toxicodendron diversilobum*) and sword fern (*Polystichum* sp.).

Wildlife species observed or heard during the survey include avian species common to San Francisco and the surrounding non-native forest habitat, and include: red-tailed hawk (*Buteo jamaicensis*), red-shouldered hawk (*Buteo lineatus*), American crow (*Corvus brachyrhynchos*), common raven (*Corvus corax*), western scrub jay (*Aphelocoma californica*), dark-eyed junco (*Junco hyemalis*), Anna's hummingbird (*Calypte anna*), Pacific wren (*Troglodytes pacificus*), song sparrow (*Melospiza melodia*), and fox sparrow (*Passerella iliaca*).

Biological Resource Impacts of the Modified Project

Modified Project Effect on Riparian Habitat, Sensitive Communities, Jurisdictional Wetlands, and Conflicts with Tree Preservation Policies or Adopted Conservation Plan

The project setting remains in a developed urban area that is not located within or adjacent to any riparian habitat or federally protected wetlands, included in a sensitive natural community, or subject to an adopted conservation plan. Therefore, as was previously determined in the FEIR for the 2008 project, the modified project would also not have any substantial adverse impact on any riparian habitat or sensitive community, federally protected wetlands or adopted conservation plan. In addition, the trees proposed to be removed under the modified project (13 blue gum eucalyptus trees) do not qualify for protection as street, significant, or landmark trees under the City of San Francisco's Urban Forestry

Ordinance, and consequently, the modified project would not conflict with any tree preservation policy or ordinance.[23]

Modified Project Effect on Special Status Species

Special-status species lists were derived from the California Natural Diversity Database (CNDDB), U.S. Fish and Wildlife Service (USFWS), California Department of Fish and Wildlife (CDFW), and California Native Plant Society (CNPS) for San Francisco North and San Francisco South 7.5-minute U.S. Geological Survey topographic quadrangles. Primary sources of data referenced for this analysis include:

- Federal Endangered and Threatened Species that May be Affected by Projects in the San Francisco North and San Francisco South, California 7.5-minute topographic quadrangles[24]
- CNPS, Online Inventory of Rare and Endangered Plants[25]
- CNDDB, Rarefind 4 computer program[26]
- Threatened and Endangered Plants List[27]
- Threatened and Endangered Animals List[28]
- Recovery Action Plan for the Mission Blue Butterfly at Twin Peaks Natural Area[29]
- Foraging Ecology of Bats in San Francisco[30]
- Mount Sutro Open Space Reserve Management Plan[31]
- The Cornell Lab of Ornithology Online Database – All About Birds[32]

---

[23] Article 16 of the Public Works Code protects San Francisco's street trees, significant trees, and landmark trees regardless of species. The ordinance protects the following three categories of trees, which are defined as follows: A *street tree* is "any tree growing within the public right-of-way, including unimproved public streets and sidewalks, and any tree growing on land under the jurisdiction of the Department [of Public Works]" as defined in Section 802 of the ordinance. A *significant tree* is defined in Section 810A as any tree: (1) located on property under the jurisdiction of the Department or on privately owned property with any portion of its trunk within 10 feet of the public right-of-way, and (2) that satisfies at least one of the following criteria: (a) a diameter at breast height in excess of 12 inches, (b) a height in excess of 20 feet, or (c) a canopy in excess of 15 feet. A *landmark tree* is any tree that: (1) has been nominated as such by a member of the public, a landowner, the San Francisco Planning Commission, the Board of Supervisors, or the Historic Preservation Commission, (2) the Urban Forestry Council (within the San Francisco Department of the Environment) has subsequently recommended as a landmark tree, and (3) is designated a landmark tree by ordinance approved by the Board of Supervisors.

[24] USFWS, 2014. Federal Endangered and Threatened Species that Occur in or May be Affected by Projects in the San Francisco North and San Francisco South U.S. Geological Survey 7.5-minute Quadrangles. USFWS Endangered Species Division. http://www.fws.gov/sacramento/ES_Species/Lists/es_species_lists-form.cfm. Data dated February 6, 2014.

[25] CNPS, 2013. Inventory of Rare and Endangered Plants (online edition, v7-13nov 11-7-13). Sacramento, California. http://www.cnps.org/cnps/rareplants/inventory/ (accessed November 11, 2013).

[26] CDFW, 2013. California Natural Diversity Database Rarefind 4. Biogeographic Data Branch, Sacramento, CA. Data dated September 27, 2013.

[27] CDFW, 2013a. State and Federally Listed Endangered, Threatened, and Rare Plants of California. Biogeographic Data Branch, Sacramento, CA. Data dated January 2013.

[28] CDFW, 2014. State and Federally Listed Endangered and Threatened Animals of California. Biogeographic Data Branch, Sacramento, CA. Data dated April 2014.

[29] Wayne, Lisa; Weiss, Stuart. *Recovery Action Plan for the Mission Blue Butterfly (Icaricia icariodes missionensis) at Twin Peaks Natural Area*. San Francisco Parks and Recreation Department April, 2009.

[30] Krauel, J.K., *Foraging Ecology of Bats in San Francisco*, M.S. Thesis, San Francisco State University. Available for review at the San Francisco Planning Department, 1650 Mission Street, Suite 400, in Case File No. 2001.0016E, 2009.

[31] UCSF. *Mount Sutro Open Space Reserve Management Plan.* Prepared by EDAW for the University of California, San Francisco. September, 2001.

[32] The Cornell Lab of Ornithology. *All About Birds.* Online Database available at www.allaboutbirds.com. Cornell University, 2011. Accessed November 2013.

Findings of the reconnaissance survey, database searches, relevant literature, and species lists were used to compile the list of special-status plant and wildlife species, their preferred habitats, and their potential to occur at the project site. No special-status plant or wildlife species were determined to have a moderate or high potential to occur within the project site (i.e., there is a low potential for all relevant species to be present) due to the historically disturbed nature of the property and absence of suitable vegetation communities for special status plants or suitable habitat for special status wildlife species. Consequently, project effects on special-status plant and wildlife species would be less than significant.

Potential Effects on Nesting Birds During Modified Project Construction

Trees within the project site and surrounding area could support native and migratory nesting birds. Most native breeding birds are protected under Section 3503 of the California Fish and Game Code (Code), and raptors are protected under Section 3503.5 of the Code. In addition, both Section 3513 of the Code and the Federal Migratory Bird Treaty Act (MBTA, 16 U.S. Code, Sec. 703 Supp. I, 1989) prohibit the killing, possession, or trading of migratory birds.[33, 34]

Thirteen mature blue gum eucalyptus trees would be removed under the modified project. Removal of trees with active nests, and other proposed project construction activities adjacent to such trees during the bird nesting season (February 1 through August 31) could result in nest destruction, injury or mortality of nestlings, and "take." However, compliance with the requirements of the Code and the MBTA, as described above, would ensure that there would be no loss of active nests or bird mortality, and would ensure that no significant effects on nesting birds would ensue.

The modified project would maintain compliance with these requirements by implementing one or more of the following procedures during construction:

- Undertaking tree removal during the non-breeding season (i.e., September 1 through January 31) to avoid impact to nesting birds or preconstruction surveys for work scheduled during the breeding season (February 1 through August 31);

- Preconstruction surveys to locate active passerine (perching bird) nests within 250 feet of the project site and any raptor nests within 500 feet of the project site, conducted by a qualified biologist, and no more than 14 days prior to the start of work during the breeding season to determine if any birds are nesting in the trees and vegetation to be removed under the project or within the vicinity of construction to be undertaken; and/or

[33] Under Section 3503 of the California Fish and Game Code, it is unlawful to take, possess, or needlessly destroy the nest or eggs of any bird, except as otherwise provided by the code or any regulation made pursuant thereto. Section 3503.5 of the code prohibits take, possession, or destruction of any birds in the orders Falconiformes (hawks) or Strigiformes (owls), or of their nests and eggs. Code Sections 3511 (birds), 4700 (mammals), 5050 (reptiles and amphibians), and 5515 (fish) allow the designation of a species as fully protected. This is a greater level of protection than is afforded by the California Endangered Species Act (CESA). Except for take related to scientific research, all take of fully protected species is prohibited.

[34] The federal MBTA (United States Code, Title 16, Section 703, Supplement I, 1989) prohibits taking, killing, possessing, or trading in migratory birds, except in accordance with regulations prescribed by the Secretary of the Interior. This act encompasses whole birds, parts of birds, and bird nests and eggs. Take is defined in the federal Endangered Species Act as "…harass, harm, pursue, hunt, shoot, wound, kill, trap, capture, or collect any threatened or endangered species." Harm may include significant habitat modification where it actually kills or injures a listed species through impairment of essential behavior (e.g., nesting or reproduction). Therefore, for projects that would not result in the direct mortality of birds, the MBTA is generally also interpreted in CEQA analyses as protecting active nests of all species of birds that are included in the "List of Migratory Birds" published in the Federal Register in 1995. With respect to nesting birds, while the MBTA itself does not provide specific take avoidance measures, a set of measures sufficient to demonstrate take avoidance have been developed over time by USFWS and CDFW. These requirements include preconstruction nesting bird surveys and establishment of appropriate buffers from construction if active nests are found.

- Avoidance of any nests identified and the establishment by a qualified biologist of a construction-free buffer zone, to be maintained until nestlings have fledged. In general, CDFW recommends a 250-foot construction exclusion zone around the nests of active passerine songbirds during the breeding season, and a 500-foot buffer for nesting raptors. These buffer distances are considered initial starting distances once a nest has been identified, and are sometimes revised downward to 100 feet and 250 feet, respectively, based on site conditions and the nature of the work being performed. These buffer distances may also be modified if obstacles such as buildings or trees obscure the work area from active bird nests, or existing disturbances create an ambient background disturbance similar to the proposed disturbance.

Potential Avian Hazards with Tower Operation under Modified Project

As indicated in the FEIR, Sutro Tower's existing design minimizes adverse effects to migratory birds by using the minimum amount of warning and obstruction lighting required by the Federal Aviation Administration (FAA). In addition, the FEIR acknowledged that as a self-supporting structure, the tower's few guy wires are located within the tower structure itself, and consequently, not positioned in a manner that would likely lead to avian impacts. The FEIR also reported that Sutro Tower's design complies with the USFWS guidelines developed to help protect migratory birds from communications towers.[35] According to the project sponsor, no reports of dead or injured birds being found on Sutro Tower property have been received since at least 1992.[36,37]

Similar to the 2008 project, the proposed antennas and equipment additions on Sutro Tower under the modified project are generally small in scale compared to the existing tower structure, and these improvements would not alter the height or bulk of the tower. Furthermore, similar to the 2008 project, the tower improvements proposed under the modified project would not involve any additional lighting or change in existing lighting on the tower. When considering that Sutro Tower has not posed a substantial threat to local avian migration in the past, and furthermore, that the modified project would not pose an additional threat, the effect on migratory birds both individually and cumulatively would not be substantially greater than reported in the FEIR for the 2008 project, and no new significant effect would result from the modified project.

In 2011, the City amended the *Planning Code* (Section 139) to incorporate bird-safe building standards, and approved *Standards for Bird-Safe Buildings*.[38] As defined in Section 139, the project site is located within an Urban Bird Refuge, and new building development within these areas is subject to standards for building façade treatments, lighting and wind generation that are intended to reduce bird hazards. Although Section 139 is developed for new buildings, and consequently, not directly applicable to Sutro Tower and the improvements proposed under the modified project, the existing design of the tower and its minimal use of lighting (and minimal glazing on the transmitter building) is nevertheless consistent with the goal of the bird safe building standards to reduce bird hazards, and the minor tower improvements proposed under the modified project would not change that conclusion.

---

35 USFWS, *Service Guidance on the Siting, Construction, Operation and Decommissioning of Communication Towers*, undated.

36 Gene Zastrow, (former) General Manager, Sutro Tower, Memorandum, October 19, 2006. This document is available for review at the Planning Department, 1650 Mission Street, Suite 400, in Case File No. 2007.0206E.

37 Eric Dausman, General Manager, Sutro Tower, Memorandum, November 22, 2013. This document is available for review at the Planning Department, 1650 Mission Street, Suite 400, in Case File No. 2007.0206E.

38 San Francisco Planning Department, Standards for Bird-Safe Buildings, available online at http://www.sf-planning.org/ftp/files/publications_reports/bird_safe_bldgs/Standards_for_Bird-Safe_Buildings_8-11-11.pdf, July 2011, accessed November 20, 2013. This document is available for review at the Planning Department, 1650 Mission Street, Suite 400, in Case File No. 2007.0206E.

Biological Resources Conclusion

The FEIR did not identify any significant effects related to biological resources. The improvements proposed under the modified project would not result in a new significant impact to biological resources and would not substantially increase the severity of any previously identified significant impact, nor would new mitigation measures be required. No new information has arisen, nor have there been any changes in circumstances, such that the modified project would result in new or substantially more severe significant impacts related to biological resources, including special status species, riparian habitat and sensitive communities, jurisdictional wetlands, wildlife corridors, or conflict with policies or ordinances protecting biological resources, either individually or cumulatively.

Air Quality

Summary of Air Quality Effects of 2008 Project in FEIR

The FEIR (in the project Initial Study) analyzed the potential for air quality impacts of the 2008 project and determined that only construction-related impacts would occur and that these impacts would be less than significant with implementation of a mitigation measure identified in the FEIR that would implement Bay Area Air Quality Management District (BAAQMD) fugitive dust control measures.

Changes in the Regulatory Background since the 2008 Project FEIR

Since certification of the FEIR, the BAAQMD updated thresholds that address the significance of construction-related emissions.[39] These thresholds, used as an assessment criterion for the modified project, are 54 pounds per day of reactive organic gases (ROG), nitrogen oxides (NO_x) or fine particulate matter ($PM_{2.5}$) and 82 pounds per day of particulate matter (PM_{10}). These thresholds are based on average daily emissions over the entirety of the project construction period.

Additionally, the San Francisco Board of Supervisors approved a series of amendments to the San Francisco Building and Health Codes generally referred hereto as the Construction Dust Control Ordinance (Ordinance 176-08, effective July 30, 2008) with the intent of reducing the quantity of dust generated during site preparation, demolition and construction work in order to protect the health of the general public and of onsite workers, to minimize public nuisance complaints, and to avoid orders to stop work by DBI. The Ordinance requires that all site preparation work, demolition, or other construction activities within San Francisco that have the potential to create dust or to expose or disturb more than 10 cubic yards or 500 square feet of soil comply with specified dust control measures whether or not the activity requires a permit from DBI. The Director of DBI may waive this requirement for activities on sites less than one-half acre that are unlikely to result in any visible wind-blown dust.

Finally, in an effort to identify areas of San Francisco most adversely affected by sources of toxic air contaminants (TACs), the City partnered with the BAAQMD to inventory and assess air pollution and exposures from mobile, stationary, and area sources within San Francisco. Areas with poor air quality, termed "Air Pollutant Exposure Zones," were identified based on two health-protective criteria: (1) excess cancer risk from the contribution of emissions from all modeled sources greater than 100 per

[39] Although the BAAQMD set aside these thresholds due to legal proceedings, the thresholds are based on substantial evidence presented in the BAAQMD 2009 Justification Report (BAAQMD, *Revised Draft Options and Justification Report, California Environmental Quality Act Thresholds of Significance,* October 2009). Therefore, the Planning Department has continued to rely on these thresholds. The thresholds were developed based on New Source Review Standards for achieving and/or maintaining federal air quality standards.

one million population, and/or (2) cumulative $PM_{2.5}$ concentrations greater than 10 micrograms per cubic meter ($\mu g/m^3$). The project site is not located within a designated Air Pollutant Exposure Zone.

Construction Air Quality Impacts of the Modified Project

Construction activities (short-term) typically result in emissions of ozone precursors and particulate matter in the form of dust (fugitive dust) and exhaust (e.g., vehicle tailpipe emissions). Emissions of ozone precursors and particulate matter are primarily a result of the combustion of fuel from on-road and off-road vehicles. However, ROGs are also emitted from activities that involve painting, other types of architectural coatings, or asphalt paving. Construction activities would have the potential to result in fugitive dust and emissions of ozone precursors and particulate matter, as discussed below.

Fugitive Dust

The modified project-related excavation, grading, and other construction activities may cause wind-blown dust that could contribute particulate matter into the local atmosphere. In compliance with the Construction Dust Control Ordinance, the project sponsor and the construction contractor would be required to implement practices to control construction dust on the site or other practices that result in equivalent dust control that are acceptable to the Director of DBI. Dust suppression activities may include watering all active construction areas sufficiently to prevent dust from becoming airborne; increased watering frequency may be necessary whenever wind speeds exceed 15 miles per hour. Reclaimed water must be used if required by Article 21, Section 1100 et seq. of the San Francisco Public Works Code. If not required, reclaimed water should be used whenever possible. Contractors shall provide as much water as necessary to control dust (without creating run-off in any area of land clearing and/or earth movement). During excavation and dirt-moving activities, contractors shall wet sweep or vacuum the streets, sidewalks, paths, and intersections where work is in progress at the end of the workday. Inactive stockpiles (where no disturbance occurs for more than seven days) greater than 10 cubic yards or 500 square feet of excavated material, backfill material, import material, gravel, sand, road base, and soil shall be covered with a 10 mil (0.01 inch) polyethylene plastic (or equivalent) tarp, braced down, or managed through the use of other equivalent soil stabilization techniques. Compliance with the regulations and procedures set forth by the San Francisco Construction Dust Control Ordinance would ensure that potential dust-related air quality impacts would be reduced to a less than significant level. Therefore, for the modified project, compliance with the San Francisco Construction Dust Control Ordinance supersedes and replaces implementation of Mitigation Measure No. 1 (Construction Air Quality) from the FEIR.

Criteria Air Pollutants

As discussed above, construction activities would result in emissions of criteria air pollutants from the use of off- and on-road vehicles and equipment. Construction-related emissions were calculated using the California Emissions Estimator Model (CalEEMod).[40] Based on the equipment list provided by the project sponsor and the number of days of construction, construction-related emissions of the modified project would be up to 2.4 pounds per day of ROG, 24.5 pounds per day of NO_x, 1.3 pounds per day of $PM_{2.5}$ and 1.5 pounds per day of PM_{10}. All of these would be below the BAAQMD thresholds of significance for construction-related emissions. Consequently, construction-related emissions of criteria air pollutants

[40] CalEEMod model runs conducted by San Francisco Environmental Planning Department, September 2, 2014. This document is on file and available for review at the Planning Department, 1650 Mission Street, Suite 400, as part of Case File 2007.0206E.

would be less than significant. Therefore, the modified project would not result in any new significant effects not identified in the FEIR.

Health Risks

Project construction would include off-road and on-road equipment. Off-road equipment (which includes construction-related equipment) is a large contributor to diesel particulate matter (DPM) emissions in California, although since 2007, the ARB has found the emissions to be substantially lower than previously expected. Newer and more refined emission inventories have substantially lowered the estimates of DPM emissions from off-road equipment such that off-road equipment is now considered the sixth largest source of DPM emissions in California.[41] A number of federal and state regulations are requiring cleaner off-road equipment. Specifically, both the USEPA and California have set emissions standards for new off-road equipment engines, ranging from Tier 1 to Tier 4. Tier 4 Interim and Final emission standards for all new engines are being phased in between 2008 and 2015, which requires engine manufacturers to produce new engines with advanced emission-control technologies. Although the full benefits of these regulations will not be realized for several years, the USEPA estimates that by implementing the federal Tier 4 standards, NOx and PM emissions will be reduced by more than 90 percent.[42]

Construction activities do not lend themselves to analysis of long-term health risks because of their temporary and variable nature.[43] As discussed above, the project site is not located within an identified Air Pollutant Exposure Zone. Although on-road heavy-duty diesel vehicles and off-road equipment would be used during construction, emissions would be temporary and variable in nature and would not be expected to expose sensitive receptors to substantial air pollutants. Furthermore, the modified project would be subject to, and would comply with, California regulations limiting idling to no more than five minutes, which would further reduce nearby sensitive receptors' exposure to temporary and variable DPM emissions.[44] Therefore, construction period TAC emissions would not result a new significant impact not identified in the FEIR.

Operational Impacts of the Modified Project

Similar to the 2008 project, the tower improvements would not generate air emissions as a result of project operations and the modified project would not generate appreciable new vehicle trips in the long-term. Likewise, there would be no air quality impacts with regard to the tower improvements being a source or a receptor of odor or TAC emissions.

---

41 ARB, *Staff Report: Initial Statement of Reasons for Proposed Rulemaking, Proposed Amendments to the Regulation for In-Use Off-Road Diesel-Fueled Fleets and the Off-Road Large Spark-Ignition Fleet Requirements*, October 2010.

42 United State Environmental Protection Agency (USEPA), "Clean Air Nonroad Diesel Rule: Fact Sheet," May 2004.

43 As explained in the BAAQMD's *California Environmental Quality Act Air Quality Guidelines*: "Due to the variable nature of construction activity, the generation of TAC emissions in most cases would be temporary, especially considering the short amount of time such equipment is typically within an influential distance that would result in the exposure of sensitive receptors to substantial concentrations. Concentrations of mobile-source diesel PM emissions are typically reduced by 70 percent at a distance of approximately 500 feet. In addition, current models and methodologies for conducting health risk assessments are associated with longer-term exposure periods of 9, 40, and 70 years, which do not correlate well with the temporary and highly variable nature of construction activities. This results in difficulties with producing accurate estimates of health risk." BAAQMD, *California Environmental Quality Act Air Quality Guidelines*, May 2012, page 8-6.

44 California Code of Regulations, Title 13, Division 3, §2485. This would only apply to heavy duty on-road vehicles.

Air Quality Conclusion

The FEIR did not identify any significant effects related to air quality. The improvements proposed under the modified project would not result in new significant air quality impacts and would not substantially increase the severity of any previously identified significant impact, nor would new mitigation measures be required. With implementation of the City's Construction Dust Control Ordinance, FEIR Mitigation Measure No. 1 is no longer required. No new information has arisen, nor have there have been any changes in circumstances, such that the modified project would result in new or substantially more severe significant impacts related to air quality from either construction or operation, either individually or cumulatively.

Noise and Vibration

Summary of Noise and Vibration Effects of 2008 Project FEIR

The FEIR (in the project Initial Study) analyzed the potential for noise from the 2008 project to result in exposure of persons to noise levels in excess of standards under the General Plan or San Francisco Noise Ordinance (Article 29 of the San Francisco Police Code); substantial temporary increases in noise levels; and exposure to excessive vibration largely in the context of construction-related noise. These impacts were identified as less than significant in the FEIR because no unusual construction methods were proposed, standard construction equipment would be required to comply with Noise Ordinance standards, and the majority of the proposed construction would be performed over 200 feet from the nearest residences.

The FEIR analysis also determined that there would be no noise impacts with regard to substantial permanent increases in noise levels because no new noise generating equipment was proposed at the site as part of operations of the 2008 project, and because the 2008 project would not generate new operational-related vehicle trips. The FEIR also reported that there would be no noise impacts with regard to the 2008 project being substantially affected by existing noise levels, as it would not result in a new sensitive land use. In addition, the FEIR also determined that the proposed improvements to the tower would not alter noise conditions related to wind noise.

Existing Noise Levels on Project Site

A survey of existing noise levels around the perimeter of the project site was conducted in October 2013. Short-term noise monitoring was conducted at three locations. The first location (ST1) was at the western property boundary approximately 200 feet from residences on Dellbrook Avenue. The second location (ST2) was at the southern property boundary approximately 300 feet from residences on Panorama Drive and Fairview Court. The third location (ST3) was at the intersection of La Avanzada Street and Palo Alto Avenue. Monitored noise levels are presented in **Table 2**, below.

Construction Noise and Vibration Impacts of the Modified Project

Given the differences in timing, location and type of construction associated with the proposed antenna/equipment improvements on the tower site and erosion control improvements, noise associated with each of these categories of construction is described separately below.

TABLE 2
SHORT- TERM AMBIENT NOISE LEVEL DATA IN THE PROJECT AREA

Measurement Location[a]	Time	Noise Levels in dBA		Predominant Sources
		Hourly L_{eq}	L_{max}	
ST1. Western property boundary approximately 200 feet from residences on Dellbrook Avenue	11:48	66	71	Crane operations
ST2. Southern property boundary approximately 300 feet from residences on Panorama Drive	12:01	65	69	HVAC equipment
ST3. North of the project site at the intersection of La Avanzada Street and Palo Alto Avenue	12:35	50	50	Distant traffic

NOTE: L_{eq} represents the constant sound level; L_{max} is the maximum noise level.

[a] Please see Figure 1 for street locations.

SOURCE: Environmental Science Associates, 2013.

Construction Noise and Vibration Impacts of the Tower Improvements Proposed under the Modified Project

As described in the Project Description, the tower improvements proposed under the modified project would involve six to nine months of construction. As also noted above, while the project sponsor plans to stage the work, there still exists potential for overlapping activities and, thus, the potential for there to be between five to fifteen workers at the site on any given construction day, depending on activity. In addition, there would be a total estimated 25 to 35 truck round-trips over the duration of the six to nine month construction period. These construction-related vehicle trips would temporarily increase traffic volumes above existing volumes, but would still not be substantial enough to generate a noticeable increase in local roadway noise (a doubling of existing traffic volumes).

Construction equipment required for the tower improvements would involve two cranes, a forklift and a skid winch. **Table 3** presents the maximum noise levels generated by construction equipment identified by the project sponsor as likely to be used during construction.[45] Physical attachment of each antenna/equipment improvement to Sutro Tower would be in the same manner that antennas have been attached to the tower since it was constructed: trained installers physically would climb to the particular installation point on the tower and would hand install each attachment with handheld air-powered wrenches. Proposed construction would be required to comply with the San Francisco Noise Ordinance, which prohibits construction activities between 8:00 p.m. and 7:00 a.m. and limits noise from any individual piece of construction equipment, except impact tools approved by the Department of Public Works, to 80 dBA at 100 feet. As shown in Table 3, all equipment proposed for tower improvements would be consistent with the San Francisco Noise Ordinance. Accordingly, the proposed tower improvements would not generate noise levels in excess of standards established in the local noise ordinance, and the modified project would not result in new or substantially more severe impacts, compared to those reported in the FEIR.

[45] Data is not available for a skid winch proposed during construction, but the motor on a skid winch is typically approximately 45 horsepower (hp), which is relatively small compared to a crane (475 hp) or a forklift (130 hp), and consequently, would be expected to generate less noise than these other equipment types.

TABLE 3
TYPICAL NOISE LEVELS FROM CONSTRUCTION EQUIPMENT FOR PROPOSED TOWER IMPROVEMENTS

Construction Equipment	Noise Level (dBA, Lmax at 50 Feet)	Noise Level (dBA, Lmax at 100 Feet)
Crane	81	75
Fork Lift	86	80

NOTE: Lmax = maximum instantaneous noise level. Cranes have an acoustical use factor of 16% which reduces the average noise level during a given hour.

SOURCE: FHWA *Roadway Construction Noise Model User's Guide, Final Report*, 2006; Ventura County, *Construction Noise Threshold Criteria and Control Plan*, 2010

With regard to temporary increases in noise levels, operation of two cranes and a forklift would result in noise levels of approximately 68 dBA at the nearest receptor 200 feet away, as calculated by the Roadway Construction Noise Model. However, receptors are at a lower elevation than the project site and shielding/absorption of noise by the vegetated hillside of up to 5 dBA would be expected to occur, depending on the location, reducing noise levels to approximately 63 dBA. Existing monitored daytime noise levels at the western property boundary were found to be 66 dBA, Leq.[46] Existing monitored daytime noise levels at the southern property boundary were determined to be 65 dBA, Leq. Construction noise associated with the proposed tower improvements would be below the existing ambient monitored noise level at these locations. Moreover, construction-related noise of the proposed tower improvements would be temporary, restrictive in hours and occurrence, and would comply with Article 29; thus, it would be considered less than significant.

None of the equipment that would be used for the tower improvements is identified by Caltrans[47] as a potential source of vibration; consequently, no vibration impacts would be associated with these activities.

Construction Noise and Vibration Impacts of the Site and Erosion Control Improvements Proposed under the Modified Project

As described in the Project Description, the site improvements proposed on the south hillside of the project property (erosion control, drainage improvements, retaining wall, etc.) under the modified project would require approximately four months to complete, and the site driveway improvements proposed on the north side of the project site (on La Avanzada Street) would occur within the last two weeks of that four month duration. The number of daily construction workers at the site for these improvements would vary depending on activity, but would range between eight and ten workers. In addition, there would be a total of up to approximately 70 truck round-trips over the duration of the four month construction period (an average daily increase of less than two truckloads per day) to import base rock, drainage rock underlayment, concrete and asphalt and export of organic material and grindings. These construction-related vehicle trips would temporarily increase traffic volumes above existing volumes, but would not be substantial enough to generate a noticeable increase in roadway noise (a doubling of existing traffic volumes), even when considered in combination with the tower improvement vehicle trips discussed above.

[46] Leq = equivalent noise level. The equivalent sound level is used to describe noise over a specified period of time, typically 1 hour, in terms of a single numerical value.

[47] Caltrans, Transportation and Construction Vibration Guidance Manual, 2013.

Construction equipment required for the site improvements proposed on the south hillside of the project property would involve three excavators and two loaders. Construction equipment required for the driveway improvements proposed on the north side of the project property would involve a stump grinder, a backhoe, loaders, a grader, a paver, and rollers. **Table 4** presents the maximum noise levels generated by construction equipment identified by the project sponsor as likely to be used during construction for these activities. As shown in Table 4, all equipment would be consistent with the San Francisco Noise Ordinance (limit of 80 dBA at 100 feet). Accordingly, the proposed site and erosion control improvements would not generate noise levels in excess of standards established in the Noise Ordinance, and the modified project would not result in new or substantially more severe construction noise impacts than that identified in the FEIR, nor would it constitute a new significant impact not previously analyzed.

TABLE 4
TYPICAL NOISE LEVELS FROM CONSTRUCTION EQUIPMENT USED FOR PROPOSED SITE AND EROSION CONTROL IMPROVEMENTS

Construction Equipment	Noise Level (dBA, Lmax at 50 Feet)	Noise Level (dBA, Lmax at 100 Feet)
Excavator	81	75
Loader	79	73
Grinder	82	76
Backhoe	78	72
Grader	85	79
Paver	77	71
Roller	80	74

NOTE: Lmax = maximum instantaneous noise level.

SOURCE: FHWA, *Roadway Construction Noise Model User's Guide, Final Report*, 2006; Ventura County, *Construction Noise Threshold Criteria and Control Plan*, 2010

With regard to temporary noise increases, operation of two excavators (not including the third mini excavator) and two loaders on the southern hillside would result in noise levels of approximately 72.5 dBA at the nearest receptor 150 feet away, as calculated by the Roadway Construction Noise Model. However, receptors are at a lower elevation than the project site and shielding/absorption of noise by the vegetated hillside of up to 5 dBA would be expected to occur, depending on the location. Construction equipment associated with these site improvements under the modified project would generate noise that could be perceptible by occupants of nearby properties. However, construction-related noise of the proposed erosion control improvements would be temporary, restrictive in hours and occurrence, would comply with Article 29 and therefore, would be less than significant.

With regard to temporary noise increases from the proposed driveway improvements on the northern end of the site property, much of the equipment would operate sequentially. Assuming simultaneous operation of a grader and a loader, noise levels of approximately 77.5 dBA would result at the nearest receptor approximately 75 feet away, at the end of Palo Alto Avenue, as calculated by the Roadway Construction Noise Model. Although road widening and repaving activities would generate noise levels above existing conditions, the duration of this activity (two weeks) would be limited and similar to street maintenance that periodically occurs on public streets throughout San Francisco. Moreover, the roadway

work other than at the extreme northern end of the proposed improvements would occur farther from the nearest residence, and would generate less noise at this location. Therefore, construction equipment would generate noise that could be considered an annoyance by occupants of nearby properties but not to the extent that the impact would be considered significant because construction-related noise of the proposed erosion control improvements would be temporary, restrictive in hours and occurrence, and would comply with the restrictions set forth in Article 29. Accordingly, the modified project would not result in a new significant construction noise impact compared to the impacts analyzed in the FEIR, nor would it cause a substantial increase in the severity of previously identified impacts.

None of the proposed construction equipment is identified by Caltrans as a potential source of vibration except for vibratory rollers, which can result in a peak particle velocity of 0.210 inches per second at 25 feet.[48] The nearest receptor to the proposed driveway improvements where a roller may be used would be residences on Palo Alto Avenue, approximately 75 feet away. At this distance, vibration from roller activity would be reduced to 0.04 inches per second which would be below building damage criterion of 0.5 inches per second and below the strongly perceptible standard of 0.1 inches per second. Sutro Tower, the transmitter building and other essential buildings and equipment on the project site would similarly be located a sufficient distance from vibratory roller activity to not be adversely affected by short-term vibration effects.

Operational Impacts of the Modified Project

Similar to the 2008 Project, the tower improvements would not result in substantial permanent increases in noise levels because no new noise generating equipment would be installed and the project would not generate appreciable new vehicle trips in the long-term. Likewise, there would be no noise impacts with regard to the tower improvements being substantially affected by existing noise levels, as the modified project would not result in a new noise sensitive land use. Similar to the 2008 project, none of the proposed tower improvements would substantially alter noise levels resulting from wind passing through the tower structure.

Noise and Vibration Conclusion

The FEIR did not identify any significant effects related to noise. The improvements proposed under the modified project would not result in a new significant impact related to noise and vibration and would not substantially increase the severity of any previously identified significant impact, nor would new mitigation measures be required. No new information has arisen, nor have there been any changes in circumstances, such that the modified project would result in new or substantially more severe significant noise or vibration impacts, either individually or cumulatively.

Hydrology and Water Quality

Summary of Hydrologic and Water Quality Effects of 2008 Project in FEIR

The FEIR (in the project Initial Study) reported that during construction, the project would be required to comply with all applicable local wastewater discharge and water quality requirements. The FEIR determined that since no ground disturbance was proposed during construction, the project would not result in short-term increases in erosion and siltation. The FEIR also determined that since the project would not change the amount of impervious area or alter drainage patterns, it would not affect surface

[48] Caltrans, Transportation and Construction Vibration Guidance Manual, 2013.

runoff rates, increase potential for flooding, or affect groundwater resources. Furthermore, the FEIR also determined that the proposed antennas and equipment that would be installed on the tower would not result in degradation of surface runoff water quality. The FEIR concluded that the project impact to water resources would not be significant, either individually or cumulatively.

Hydrologic and Water Quality Impacts of the Tower Improvements Proposed under the Modified Project

The tower improvements proposed under the modified project would not result in any different or greater impacts on hydrology and water quality than that discussed in the FEIR. As with the 2008 project, construction of the tower improvements proposed under the modified project would be required to comply with all applicable local wastewater discharge and water quality requirements. Similar to the 2008 project, the tower improvements proposed under the modified project would not result in ground disturbance or an increase in impervious surfaces and, consequently, these improvements would not affect surface runoff rates, increase flooding, contribute to siltation, or affect groundwater resources. As with the 2008 project, the additional antennas and small equipment proposed on the tower under the modified project would be painted if at all with water-resistant paints that would not leach into surface water during storm events. The proposed ground-level dish would contain a factory coating and consequently, would not require painting. Accordingly, the short- and long-term effects of the tower improvements proposed under the modified project on hydrology and water quality would be the same as those identified in the FEIR (less than significant), and no new significant impact would result.

Hydrologic and Water Quality Impacts of the Site and Erosion Control Improvements Proposed under the Modified Project

Construction activities associated with the proposed ground-level site improvements, including clearing, grading and excavation, could temporarily create conditions whereby soils are more susceptible to erosion by wind or stormwater runoff, which may result in short-term increases in siltation and other pollutants in surface water runoff and associated degraded water quality. Stormwater that occurs within the construction zone for the proposed ground-level improvements under the modified project drains via on-site stormdrains or overland down slope, depending on location, and ultimately enters the City's combined sewer system, and hence is treated at the Oceanside Water Pollution Control Plant and discharged to the Pacific Ocean.

The federal Clean Water Act effectively prohibits discharges of stormwater from construction projects unless the discharge is in compliance with a National Pollutant Discharge Elimination System (NPDES) permit. Construction stormwater discharges to the City's combined sewer system would be subject to the requirements of Article 4.2 of the *San Francisco Public Works Code* (supplemented by DPW Order No. 158170).[49] At a minimum, the City requires that a project sponsor develop and implement an erosion and sediment control plan to reduce the impact of runoff from a construction site. The plan must be reviewed and approved by the SFPUC prior to implementation, and the SFPUC conducts periodic inspections to ensure compliance with the plan. Any stormwater drainage during construction that flows to the City's combined sewer system and receives treatment at the Oceanside Water Pollution Control Plant would be discharged in compliance with the City's existing NPDES permit. Therefore, significant water quality impacts related to violation of water quality standards or degradation of water quality due to discharge of construction-related stormwater runoff would be precluded by adequate treatment of

[49] Article 4.2 incorporates and implements the City's NPDES permit for the Oceanside Water Pollution Control Plant. This permit also incorporates the requirements of the federal Combined Sewer Overflow (CSO) Control Policy.

stormwater at Oceanside Water Pollution Control Plant, and with implementation of site erosion control measures in compliance with Article 4.2 of the *San Francisco Public Works Code*. As discussed in the Project Description, during construction proposed soil stabilization controls that would be implemented in the work areas where ground disturbance would occur, include hydroseeding, use of fiber rolls and/or jute netting, storm drain inlet protection, and in the work area of the site driveway construction of a stabilized construction entrance and concrete washout basin. With implementation of an erosion and sediment control plan, there would be no new significant impacts related to potential increases in sedimentation and pollutants in stormwater, compared to those analyzed in the FEIR, nor would there be a substantial increase in the severity of a previously identified significant impact.

The ground level improvements proposed under the modified project would result in a minor increase (approximately 1,700 square feet) in impervious surfaces on site. This minor increase in impervious surfaces would not demonstrably increase peak stormwater runoff rates from the project site that would result in flooding, or affect groundwater recharge. Since the total disturbed ground surface area would be less than 5,000 square feet, the proposed project is not subject to the SFPUC *Stormwater Design Guidelines.* Nevertheless, the project proposes a number of permanent stormwater improvements, including installation of new stormdrains on the southern hillside, and installation of a riprap lined swale on the east side of La Avanzada Street within the project site, which would improve stormwater collection over existing conditions. These stormwater collection improvements, in combination with the proposed permanent erosion control improvements, would also serve to reduce the potential for erosion and associated sedimentation in stormwater runoff.

Hydrology and Water Quality Conclusion

The FEIR did not identify any significant effects related to hydrology and water quality. The improvements proposed under the modified project would not result in a new significant impact to hydrology and water quality and would not substantially increase the severity of any previously identified significant impact, nor would new mitigation measures be required. No new information has arisen, nor have there been any changes in circumstances, such that the modified project would result in new or substantially more severe significant impacts related to hydrology or water quality, including the potential for flooding, effects to runoff and water quality from sedimentation and pollutants, and effects on groundwater supply and recharge, either individually or cumulatively.

Greenhouse Gases

Current requirements related to greenhouse gas (GHG) analysis were established in 2010, subsequent to certification of the FEIR. Therefore, GHGs are discussed below consistent with current procedures and requirements. The GHG analysis included herein includes a qualitative discussion of whether construction and operation of the modified project would result in significant GHG emissions.

Greenhouse Gas Evaluation

GHG emissions and global climate change represent cumulative impacts. GHG emissions cumulatively contribute to the significant adverse environmental impacts of global climate change. No single project could generate enough GHG emissions to noticeably change the global average temperature; instead, the combination of GHG emissions from past, present, and future projects have contributed and will contribute to global climate change and its associated environmental impacts.

The BAAQMD has prepared guidelines and methodologies for analyzing GHGs. These guidelines are consistent with CEQA Guidelines Sections 15064.4 and 15183.5 which address the analysis and determination of significant impacts from a proposed project's GHG emissions. CEQA Guidelines Section 15064.4 allows lead agencies to rely on a qualitative analysis to describe GHG emissions resulting from a project. CEQA Guidelines Section 15183.5 allows for public agencies to analyze and mitigate GHG emissions as part of a larger plan for the reduction of greenhouse gases and describes the required contents of such a plan. Accordingly, San Francisco has prepared *Strategies to Address Greenhouse Gas Emissions* (GHG Reduction Strategy)[50] which presents a comprehensive assessment of policies, programs, and ordinances that collectively represent San Francisco's Qualified GHG Reduction Strategy in compliance with the CEQA Guidelines. The actions outlined in the strategy have resulted in a 14.5 percent reduction in GHG emissions in 2010 compared to 1990 levels,[51] exceeding the year 2020 reduction goals outlined in the BAAQMD's *2010 Clean Air Plan,* Executive Order S-3- 05,[52] and Assembly Bill 32 (also known as the Global Warming Solutions Act.)[53]

Given that the City's local greenhouse gas reduction targets are more aggressive than the State and Region's 2020 GHG reduction targets and consistent with the long-term 2050 reduction targets,[54] the City's GHG Reduction Strategy is consistent with the goals of EO S-3-05, AB 32, and the Bay Area 2010 Clean Air Plan. Individual project compliance with the City's Greenhouse Gas Reduction Strategy is demonstrated by completion of the Compliance Checklist for Greenhouse Gas Analysis. Projects that are consistent with San Francisco's *Strategies to Address Greenhouse Gas Emissions*[55] are determined to be consistent with San Francisco's Qualified GHG Reduction Strategy and therefore would result in a less-than-significant GHG impact. An assessment of the modified project's compliance with San Francisco's *Strategies to Address Greenhouse Gas Emissions* is provided in the *Compliance Checklist for Greenhouse Gas Analysis*, which concluded the modified project would comply with the GHG reduction strategies.[56]

Therefore, the modified project would not result in a new significant impact associated with greenhouse gases. The contribution to cumulative impacts related to greenhouse gas emissions would not be cumulatively considerable.

---

50 San Francisco Planning Department, *Strategies to Address Greenhouse Gas Emissions in San Francisco*, 2010. The final document is available online at: http://www.sf-planning.org/index.aspx?page=2627. The *Clean Air Plan*, Executive Order S-3-05, and Assembly Bill 32 goals, among others, are to reduce GHGs in the year 2020 to 1990 levels.

51 San Francisco Department of Environment (DOE), *San Francisco Climate Action Strategy, 2013 Update*.

52 Executive Order S-3-05, sets forth a series of target dates by which statewide emissions of GHGs need to be progressively reduced, as follows: by 2010, reduce GHG emissions to 2000 levels (approximately 457 million $MTCO_2E$); by 2020, reduce emissions to 1990 levels (estimated at 427 million $MTCO_2E$); and by 2050 reduce emissions to 80 percent below 1990 levels (approximately 85 million $MTCO_2E$).

53 The *Clean Air Plan*, Executive Order S-3-05, and Assembly Bill 32 goals, among others, are to reduce GHGs in the year 2020 to 1990 levels.

54 San Francisco's Greenhouse Gas Reduction ordinance requires that by 2008, the City determine its GHG emissions for the year 1990, the baseline level with reference to which target reductions are set; by 2017, reduce GHG emissions by 25 percent below 1990 levels; by 2025, reduce GHG emissions by 40 percent below 1990 levels; and by 2050, reduce GHG emissions by 80 percent below 1990 levels.

55 San Francisco Planning Department. *Strategies to Address Greenhouse Gas Emissions*. November 2010. Available online at: http://sfmea.sfplanning.org/GHG_Reduction_Strategy.pdf.

56 San Francisco Planning Department, *Compliance Checklist for Greenhouse Gas Analysis: Table 1. Private Development Projects, Sutro Tower Antenna Additions and Site and Erosion Control Improvements*. April 15, 2014. This document is available for review as part of Case File No. 2007.0206E at the SF Planning Department, 1650 Mission Street, Suite 400, San Francisco, California, 94103.

Other Less than Significant Environmental Impacts

The FEIR, in the project Initial Study, determined that the 2008 project would not result in significant impacts in the following areas: Land Use and Land Use Planning; Population and Housing; Cultural Resources; Transportation and Circulation; Wind and Shadow; Utilities and Service Systems; Public Services; Hazards and Hazardous Materials (excluding RFR); Mineral and Energy Resources; and Agriculture Resources. The following discussion briefly describes why environmental effects associated with the modified project under these topics would also be less than significant, as was the case for the 2008 project, and why the modified project would not result in any new significant impacts.

- **Land Use and Land Use Planning.** All construction proposed under the modified project would occur within the site property, and subsequent operations with implementation of the modified project would be unchanged from those at present. Consequently, the modified project would not physically divide the arrangement of existing uses and activities that surround it. Sutro Tower is an existing use that has been operating on the project site since 1973. The modified project would intensify and add similar uses to the tower and site. The proposed tower antenna additions and site and erosion control improvements would not change the use of the existing facility or noticeably change the bulk or intensity of the tower and buildings on-site. As a result, the modified project would not introduce new or incompatible uses to the area.

  The modified project would also not conflict with any applicable land use plan, policy or regulation of an agency with jurisdiction over the project adopted for the purpose of avoiding or mitigating an environmental effect. The project site is located within a Residential House, One Family (Detached Dwellings) (or RH-1(D)) zoning district, where the Sutro Tower facilities are conditionally permitted. The Conditional Use (CU) authorization issued for Sutro Tower authorizes the construction of the tower and accessory structures and the use of the facility for radio frequency broadcasting. No amendment to Sutro Tower's CU authorization is required under the modified project.

  As such, the modified project would neither result in a new significant effect on land use nor increase the severity of any previously identified impact, and no new mitigation is required.

- **Population and Housing.** As discussed in the Project Description, the modified project would generate a short-term demand for up to approximately 15 construction workers. Since the proposed construction activities would be temporary, the modified project would not result in growth-inducing impacts, would not result in an increase in the local population or housing, and would not indirectly induce growth by creating new opportunities for local industry or commerce. Once the proposed facilities are operational, no change in long-term employment at or occupancy of the tower facilities is anticipated. Given the minor improvements proposed under the modified project, and that all proposed facilities under the modified project would occur within the site property, the modified project (similar to the 2008 project) would not result in displacement of any housing or people. As with the 2008 project, the modified project would also not contribute to any potential cumulative effects related to population and housing. As such, the modified project would neither result in a new significant effect on population and housing nor increase the severity of any previously identified significant impact, and no new mitigation is required.

- **Cultural Resources.** The portions of the project site proposed for improvements have been disturbed by construction in the past, primarily during the original construction of Sutro Tower and its ancillary buildings. The FEIR reported that no cultural resources have been previously identified within or directly adjacent to the project site, or within a one-quarter mile of the project area. Additionally, Sutro Tower is not an historical or cultural resource as defined by CEQA Guidelines Section 15064.5, and is not in an historic district. Any proposed ground-level disturbance that would occur under the modified project, such as site clearing and minor grading, would be relatively shallow in depth (between 0 to 3 feet, with limited exceptions, such as where the proposed retaining wall would require drilled piers to a minimum of between 8 and 12 feet into the soil). Given these factors, the modified project would neither result in a new significant effect on cultural resources nor increase the severity of any previously identified impact, and no new mitigation is required.

- **Transportation and Circulation.** The project site is accessible via Dellbrook Avenue and La Avanzada Street. Dellbrook Avenue is a residential street that intersects with Clarendon Avenue. La Avanzada Street is a paved road that leads to the site, a portion of which is privately owned by the project sponsor. The modified project would not introduce any new uses to the project site that would generate long-term changes in traffic on local roadways. Thus, potential traffic and transportation effects on area roadways would be confined to construction of the proposed project.

  Construction activities would include daily vehicle trips generated by the arrival and departure of construction workers. As described in the Project Description, the proposed antenna/equipment improvements would require three to four construction workers intermittently over a six- to nine-month period, and the other proposed site improvements would require 8 to 10 workers over a three- to four-month period. The proposed antenna/equipment improvements would generate a modest number of truck deliveries (e.g. pre-fabricated antenna sections and associated assembly materials) estimated at a total of 5 large truck (e.g., 5-axle semi-trailer) round trips, and 20 to 30 smaller delivery truck trips. The other proposed improvements would require deliveries of materials to the site (e.g., base and drain rock, organic materials, concrete, asphalt), resulting in a total of approximately 70 mid-size to large truck (e.g., 3-axle, and 5-axle semi-trailer) round trips. La Avanzada Street would be used to access the site to haul the equipment and materials, with trucks likely arriving via Market Street, 17th Street, Clayton Street, Twin Peaks Boulevard, and Clarendon Avenue. Construction of the proposed project would not require any lane closures.

  As with the 2008 project, construction-generated traffic associated with the modified project would be temporary and would not result in any long-term degradation in operating conditions or level of service on any of the roadways in the vicinity of the proposed project. Therefore, this short-term increase in vehicle trips would not substantially affect level of service and traffic flow on local roadways. The primary impacts from the movement of construction trucks would include short-term and intermittent lessening of roadway capacities due to slower movements and larger turning radii of the trucks compared to passenger vehicles. Because relatively few trucks would be used, and such truck activity would be dispersed throughout the construction duration, truck traffic associated with project construction would not substantially adversely affect either traffic conditions or cause substantial damage to local streets. In fact, the modified project would repave and widen the upper portion of La Avanzada Street, thereby improving the condition of this street compared to existing conditions.

Once constructed, the new antennas/equipment and site improvements would require routine maintenance trips and inspections, as is the case under existing conditions. Maintenance activities would not increase above existing levels for the facility and therefore, would not result in an increase of traffic in the project area.

The nearest airport to the project site is the San Francisco International Airport, located about 13 miles southeast of the City of San Francisco. At present, the tower is in compliance with all FAA regulations. The modified project would not require additional FAA-approved lighting, as it would not add additional height or bulk to the tower. There are no other elements of the modified project that would create a safety hazard for air traffic. Consequently, the modified project would not alter conditions with respect to air traffic safety.

There are no unusual design features or uses proposed as part of the modified project that would substantially increase traffic hazards. Likewise, the modified project would not result in an adverse change with regard to emergency access, as the project site is accessible from major streets, including Clarendon Avenue and Twin Peaks Boulevard. All proposed improvements would occur within the project site boundary, although the private upper portion of La Avanzada Street is informally used by the public. The proposed improvements, including widening, repaving, and striping for parking, on this portion of La Avanzada Street would serve to improve general vehicle circulation and parking at this location.

In summary, the modified project would neither result in new significant effects with regard to transportation nor increase the severity of any previously identified impact, and no new mitigation is required.

- **Wind and Shadow.** The additional antennas and small equipment that would be installed on the tower under the modified project would be relatively small in scale, and these improvements would not increase the height or bulk of the tower. Consequently, the tower improvements would not result in changes to ground-level winds nor substantially alter shadows in the area. Similarly, given the scale of ground-level site improvements proposed under the modified project, such improvements would not have a noticeable effect on wind or shadow. As a result, the modified project (similar to the 2008 project) would not have any new significant adverse impacts on wind and shadow nor increase the severity of any previously identified impact, and no new mitigation is required.

- **Utilities and Service Systems.** The modified project would not increase population on the site or area, and consequently, would not increase long-term demand for or create a need for construction of new or expanded water supplies, water and wastewater treatment facilities, stormwater drainage facilities or solid waste collection facilities. The modified project would create a finite amount of construction debris during the construction phase; any portion of this that would not be recycled and thus disposed of at a landfill would not adversely affect remaining landfill capacity. Consequently, the modified project would neither result in a new significant effect on utilities or service systems nor increase the severity of any previously identified significant impact, and no new mitigation is required.

- **Public Services.** The modified project would not increase demand for public services such that it would require construction of new or altered facilities for fire and police protection, schools, parks or other services. Consequently, the modified project would neither result in a new

significant effect on public services nor increase the severity of any previously identified significant impact, and no new mitigation is required. See also Risk of Fire discussion, above.

- **Hazards and Hazardous Materials.** As reported in the FEIR, the project site is not located on any environmental database, nor in proximity to any properties listed on the State Cleanup Sites List or Leaking Underground Storage Tanks List, or lists of other sites of potential environmental concern.[57] No elements of the modified project would create a public safety hazard. Standard construction materials (e.g., concrete, rebar steel, drainage rock, storm drains), paints and solvents would be used during project construction and/or maintenance during operation. The modified project would not involve installation or alteration of any fuel tanks or emergency generators, or increase the use of any hazardous materials at the project site during operation. The tower is currently in compliance with all applicable FAA regulations, and under the modified project would not require additional safety lighting; consequently, the modified project would have a less than significant effect on air traffic safety. Therefore, the modified project would neither result in a new significant effect related to hazards or hazardous materials nor increase the severity of any previously identified impact, and no new mitigation is required. See also Radio Frequency Radiation, Risk of Fire, and Hydrology and Water Quality discussion, above.

- **Mineral and Energy Resources.** No mineral resources are located on or near the project site, and as a result, the modified project would not result in the loss of availability of a locally-important mineral resource site. Sutro Tower currently meets all applicable state and local codes concerning energy consumption, and would continue to do so under the modified project; consequently, the modified project would not encourage activities which would result in the use of large amounts of energy in a wasteful manner. Therefore, the modified project would neither result in a new effect on mineral or energy resources nor increase the severity of any previously identified significant impact, and no new mitigation is required.

- **Agriculture and Forest Resources.** The project site is identified by the Department of Conservation Farmland Mapping and Monitoring Program as Urban and Built-Up Land. Because the site does not contain agricultural uses and is not zoned for such uses, the modified project would not convert any important farmland or conflict with a Williamson Act contract. As stated in the Project Description, the modified project would remove 13 eucalyptus trees but would plant 9 new Coast Live oak trees. Consequently, the modified project would neither result in a new significant effect on agricultural or forest resources nor increase the severity of any previously identified impact, and no new mitigation is required.

[57] Department of Toxic Substances Control EnviroStor database at https://www.envirostor.dtsc.ca.gov; State Water Resources Control Board Geotracker database at http://geotracker.waterboards.ca.gov.

CONCLUSION

Based on the foregoing, it is concluded that the analyses conducted and the conclusions reached in the Final EIR certified on October 23, 2008 remain valid, and that no Subsequent or Supplemental EIR is required for the proposed project modifications. The proposed revisions to the project would not cause new significant impacts not identified in the FEIR, nor result in significant impacts that would be substantially more severe than those described in the FEIR, and no new mitigation measures would be necessary to reduce significant impacts. No changes have occurred with respect to circumstances surrounding the proposed project that would cause significant environmental impacts to which the project would contribute considerably, and no new information has been put forward to demonstrate that the modified project would cause new significant environmental impacts or a substantial increase in the severity of previously identified significant impacts. Therefore, no supplemental environmental review is required beyond this Addendum.

I do hereby certify that the above determination has been made pursuant to State and Local requirements.

December 23, 2014
Date

Sarah B. Jones
Environmental Review Officer

Questions and Concerns Raised at Neighborhood Meeting of 1/7/15:

Radio Frequency ("RF") Questions and Concerns:

Question: Does the power of the TV stations increase at night?

Answer: No, the power for all the FM and TV stations is constant in compliance with Federal Communications Commission ("FCC") rules. It is not possible for individual transmitters to increase power by more than approximately 10% due to limitations of the transmitter equipment. The power can be reduced due to equipment failures or maintenance needs of individual transmitters.

Question: Does Sutro Tower, Inc. ("STI") monitor the power output of all the TV and FM stations located on Sutro Tower?

Answer: Yes, as a byproduct of our overall performance monitoring of the TV and FM antennas, we monitor the power output continuously of all these transmitters. Such monitoring is completed automatically via direct download from the equipment; there is no manual production from station employees. Eric Dausman, Chief Operating Officer of STI, is notified of any transmitter power exceeding 5% of the licensed value.

Question: How long will the auxiliary antennas be in use during the construction period?

Answer: We only need to switch some stations to auxiliary antennas during the installation of the two new TV antennas and one new FM antenna that will be mounted above Level 6 at the top of the tower. Each antenna installation will require approximately two days. This work will be performed in the daytime between 8 AM and 5 PM.

Question: What is the current level of RF radiation coming from Sutro Tower in percent of the standard?

Answer: The RF level measured in field studies (see e.g. 2014 report of triennial 200-point RF survey) is 6.0% of the most restrictive FCC public exposure limit . The total new RF level is conservatively calculated to be 6.2% of the public limit. This will be confirmed with field tests within two weeks of the activation of the new antennas.

Question: We are concerned about the RF radiation levels at our home. How can we find out what the levels are?

Answer: Sutro Tower continues to be committed to make measurements in the neighborhood for any resident that requests it. A resident can also ask the Department of Public Health to take a measurement.

Question: Have RF measurements ever been made at Twin Peaks (1 Christmas Tree Point Road)?

Answer: Twin Peaks has not traditionally been one STI's 200-point RF measurement locations. However, STI is willing to include it in the future, including in the survey to be completed after activation of any new broadcast antennas. That being said, STI's consulting engineer from Hammett & Edison, Inc., Bill

Hammett, responded that any measurements taken at such location are going to include RF radiation from the two towers currently located on Twin Peaks.

Question: How can the Twin Peaks facility emit RF radiation if there are no commercial broadcasters located on the two Twin Peaks towers?

Answer: Although Twin Peaks is a separate City-owned facility and there are no commercial broadcasters, there is an existing public FM radio transmitter for KALW (San Francisco Unified School District), as well as antennas and dishes which serve the City's Police and Fire Departments, the Municipal Transportation Authority and the Community Broadband Network.

It was also noted that the one of the two main Twin Peaks towers needs to be replaced so the City (Department of Emergency Management) would serve as lead on adding a third tower near the existing towers, then removing the old tower after the new tower (and dish/antenna transfer) is complete. For a period of up to approximately one year, there would be three towers on-site. As Twin Peaks is City owned and operated, no public hearing is automatically required as part of any building permit for the project. An environmental application has been submitted for review by Environmental Planning Staff. No building permits have been submitted at this time.

Question: Can STI be required to limit future RF emissions (such as to the maximum previously emitted by Sutro Tower prior to conversion of its antennas from analog to digital)?

Answer: As long as emissions remain significantly below the maximum public exposure limits, there is no justification for requiring such a limitation on the use of Sutro Tower.

Question: Is STI willing to post signs at the reservoir alerting hikers when Sutro Tower's auxiliary antennas are in use?

Answer: Pursuant to the Neighborhood Agreement, STI maintains a list of neighbors who wish to receive email notification of auxiliary antenna activation. As such, any such additional posting would be duplicative of the existing process for those concerned neighbors.

Nevertheless, STI is willing to post such signs on its own property (but cannot post such signs without permission on property it does not own) but does not believe there is any reasonable purpose in doing so since the RF emissions during the infrequent use of auxiliary antennas is still well below the maximum public exposure level. For example, Hammett & Edison's calculates that the use of auxiliary antennas during the several days of construction for the proposed new broadcast antennas would not exceed 15% of the public limit. See Sutro Tower, Inc. Supplemental Report by Hammett & Edison, Inc. dated September 26, 2014.

Interference Questions and Concerns:

Question: Will the proposed City Wi-Fi microwave antennas interfere with household Wi-Fi?

Answer: The City's Community Broadband Network antennas are not intended to broadcast a Wi-Fi signal straight to residents near Sutro Tower, but would utilize an encrypted signal to transmit data to specific sites where a "bridge" would connect to a Wi-Fi transmitter. According to the City's Department of Technology, these antenna operate at different frequencies that will be used solely for distribution of

the signals to other Wi-Fi repeaters around the City. Thus, they should not interfere. The City has had public Wi-Fi on public buildings for several years and there have been no complaints of interference to adjacent home Wi-Fi users.

Question: I have problems with my garage door opener and Wi-Fi. I have heard these issues are because of my home's proximity to Sutro Tower. What can be done?

Answer: Sutro Tower can provide assistance to help determine the cause of such problems. However, because of the unlicensed nature of these sorts of appliances, users cannot expect perfect operation.

Question: We hear KOIT radio on our telephones. What causes this and what can be done about it?

Answer: The wires in your house can act as an antenna and your telephone can then receive audible signals. Sutro Tower can provide assistance to add filters to your telephone wires to reduce or completely eliminate the radio station audio.

View Questions and Concerns:

Question: Why doesn't the City's Wireless Telecommunications Services Facilities Siting Guidelines ("WTS Guidelines") prohibit facilities such as Sutro Tower from becoming an "antenna farm?"

Answer: The Planning Commission previously determined that the WTS Guidelines do not apply to Sutro Tower. The basis for the exemption appears to be the following language found in the Introduction of the WTS Guidelines: "These policies and guidelines do not, at this time, address similar policies, preferences and conditions of approval for AM or FM radio antennae towers, television antennae towers, personal pager microwave dishes, teleport satellite systems, or other similar facilities associated with Wireless Telecommunication Services." Such Guidelines were developed and primarily intended to address the proliferation of WTS facilities used for personal communications services (aka "cellular" sites) for each individual carrier, as opposed to a central location, such as Sutro Tower, which can be shared by all so as to avoid the spread of multiple towers throughout the City by multiple carriers.

Noise Questions and Concerns:

Question: How will the new antennas be connected to Sutro Tower?

Answer: All of the antennas are bolted to either an existing mount or a newly designed mount. All but one of the new mounts are either bolted to the leg or the tower horizontal truss parts of the tower according to the structural engineer's design. One antenna mount is being welded to the steel tower framing.

Question: Will the attachment of the proposed antennas be noisy or otherwise increase the noise generated by operation of Sutro Tower?

Answer: As described in the Addendum, construction equipment required for the tower would involve two cranes, a forklift and a skid winch, as well as handheld air-powered wrenches. Proposed construction would comply with the San Francisco Noise Ordinance. Accordingly, the proposed tower improvements would not generate noise levels in excess of established standards.

Ongoing maintenance of Sutro Tower will continue to be required regardless of the number of antennas located thereon. As such, rust removal, sandblasting and similar structural maintenance procedures necessary to protect the structural integrity of the tower itself will continue each summer (and as required by the Standard Antenna Conditions recorded against the Sutro Tower site), with additional maintenance on the deeper, interior elements of Sutro Tower necessitating removing the skin of the beams at various levels, and reinforcing or repairing elements and their connections as needed, especially in connection with corrosion that occurs in the foggy environment.

Erosion Control Improvements Questions and Concerns:

Question: Is STI willing to work with a botanist, arborist or other specialist specializing in the Mount Sutro environment to ensure that any replacement trees planted by STI can survive as there is a concern proposed Coast Live Oaks are not suitable?

Answer: Landscape architects and other certified specialists evaluated the area and were consulted by STI's civil engineering firm, Sandis, in completing the plans for erosion control improvements, including the proposed replacement of eucalyptus with Coast Live Oak trees. Nevertheless, STI is open to consultation with others who believe there may exist a better replacement tree for the Mount Sutro environment. In that vein, Eric Dausman met with two representatives from Sutro Stewards on January 8, 2015, in a meeting pre-arranged prior to the neighborhood meeting, for a discussion on this topic as well as other issues of concern to the Sutro Stewards organization.

Community Outreach Questions and Concerns:

Question: Why hasn't STI publicized its plans for the tower additions, erosion control improvements, and the upcoming discretionary review hearing?

Answer: STI's plans have been in the public domain for nearly two years.

STI has been informed that each of the local neighborhood associations with residents living near Sutro Tower, namely Midtown Terrace Owners Association, Twin Peak Improvement Association and Forest Knolls Neighborhood Association, has designated liaisons to receive information on behalf of each such association (the "Liaisons"). Approaching two years ago, STI representatives met with such Liaisons and shared with each of them the plans for both the tower additions and the erosion control improvements (the "Plans"), as well as the rationale for each and the environmental review process which we anticipated the City would follow in light of such building permit applications.

Pursuant to an invitation that was sent out to over 3000 of Sutro Tower neighbors, STI held an Open House at the Site on May 18, 2013. Approximately eighty neighbors, including the Liaisons, toured the Site, reviewed the Plans and asked questions to Sutro Tower staff and consulting engineers and other experts about day-to-day operations and maintenance as well as the improvements STI intends to make pursuant to the Plans. The Plans were also posted to the Sutro Tower website (www.sutrotower.com) for easy access to the public where they remain accessible to our neighbors.

Although STI representatives had the opportunity to meet with various neighbors and the Liaisons over the course of 2013 and 2014, and give them updates on the City's review process of our Plans, STI met with all the Liaisons a year later on May 20, 2014, both to give an update on such Plans and the review process, but also to review the results of an annual inspection. Thereafter, STI continued informal

updates with various neighbors and the Liaisons both in response to their questions and during neighborhood events, such as at the annual holiday event for the Coalition for San Francisco Neighborhoods, the Breakfast Club event for the Willie Brown Institute, etc.

On December 17, 2014, representatives from the City Planning Department's Environmental division contacted STI and confirmed that the environmental review of the Plans and potential environmental impacts (aka the "Addendum") would be completed and issued on or before December 24, 2014. STI promptly coordinated with its consultants and City representatives to plan a neighborhood meeting for early January ("Neighborhood Meeting") in order to present such Addendum and related findings to the neighbors.

Notices of the Neighborhood Meeting were prepared and sent to the 613 neighboring owners with properties within 1000 feet of the Site on December 18, 2014. Additionally such notices were forwarded to the Liaisons via email on December 19, 2014, with a request to forward the notices to the membership email lists so as to increase participation.

Question: Why were the Liaisons asked to forward the community meeting notices to the neighborhood association membership email lists?

Answer: That certain Final Terms of the Agreement to Provide Information and Extend Certain Services to Sutro Tower Area Residents dated November 7, 2008, between STI and Midtown Terrace Owners Association, Twin Peak Improvement Association and Forest Knolls Neighborhood Association (the "Neighborhood Agreement") requires certain communications between STI and the Liaisons. Although STI communicates with any neighbor who asks to have direct communications, most of the communications is with the Liaisons pursuant to the Neighborhood Agreement.

As the role of a liaison is to provide communication between different organizational groups, it is presumed that the Liaisons, acting as liaisons between their associations and STI, would want to pass along notices to their members. Moreover, although STI sends out notices via U.S. Mail to neighbors pursuant to lists purchased for such purpose; many neighbors only pay attention to email, not direct mail, and no such lists of email addresses are available to STI. In the past, when Liaisons have received notices, reports, etc. from STI, the response has been that such notices would be forwarded to the email membership lists.

Sutro Tower, Inc. Proposal for Tower Additions and Erosion Control Improvements

1 La Avanzada Street – at Sutro Tower, Lot 003 in Assessor's Block 2724 –

San Francisco Department of Building Inspection
Application Numbers 201304124452 and 201304124453

San Francisco Planning Department Case No. 2014.1377D

Statement of P. Eric Dausman

I am the Vice-President and Chief Operating Officer of Sutro Tower, Inc. ("STI"), the owner and operator of Sutro Tower located at 1 La Avanzada Street (the "Site"). I have worked with STI since 2010, and have been the manager of similarly situated communications facilities in California, New York and Oregon since 1980.

Sutro Tower is the principal broadcast site serving San Francisco for over 40 years, currently supporting 11 television stations, 4 FM radio stations, plus a number of other communications facilities. Based on my personal knowledge of the Site and Sutro Tower, I have concluded that the work associated with these applications is necessary to meet the growing need for wireless communications by first responders, television and radio stations and community users.

Specifically, regarding the tower additions, STI is requesting the following (the "Tower Additions"):

-2 additional TV main broadcast antennas
-1 additional FM radio main broadcast antenna
-1 relocated existing FM auxiliary antenna
-1 additional standby FM auxiliary antenna
-1 additional TV auxiliary antenna
-1 FM radio translator antenna
-15 community broadband antennas
-16 point-to-point microwave antennas (of which 3 are receive-only)
-11 other receive-only antennas
-2 camera mounts

STI is also seeking a building permit to add new ground improvements at the STI facility, including the following (the "Erosion Control Improvements"):

-Driveway improvements
-Retaining wall
-Hillside erosion control and drainage improvements
-Fenceline stairway and walkways
-Miscellaneous erosion control and access improvements
-Minor modifications to building that houses generators
-Replacement of a ground-level satellite receive-only dish and new dish foundation

Tower Additions

New Broadcast Antennas

The number of over-the-air viewers has been growing again and currently number around one million in the Bay Area alone. These viewers will continue to grow as cord cutting and over-the-top viewing increases. In addition, all television viewers in the Bay Area rely on non-stop digital signals at Sutro Tower.

The two new television broadcast antennas listed above are intended for KTNC and KEMO which plan programming in Spanish and several Asian languages. As shown in the letter from Cesar Angulo, President and General Manager of KTNC-TV Channel 42, attached hereto as Exhibit A, KTNC seeks to add a new transmitter and antenna at Sutro Tower in addition to its current transmitter located on Mt. Diablo, in Contra Costa County, to better serve its Spanish speaking audience.

Specifically, over-the-air transmission from Mt. Diablo is significantly hindered by Contra Costa hills affecting over the air reach to San Francisco, Alameda, San Mateo and Santa Clara counties, where 68% of all Bay Area Spanish television households reside. KTNC also intends to locate an auxiliary antenna at Sutro Tower to support its broadcasts in case of emergency and during other instances when its main antennas are inoperable (see below).

Similarly, KEMO-TV, a provider of foreign language entertainment, news, public service announcements and children's television, is seeking an additional location for a transmitter and antenna on Sutro Tower to better serve its viewers. As described in the letter from Mark P. Hirschhorn, Vice President of Northstar San Francisco License, LLC, owner of KEMO-TV, attached hereto as Exhibit B, KEMO now broadcasts from Mt. St. Helena which constrains its over-the-air signal relative to the topography of the region.

As a result, KEMO, with its multiple programming streams to diverse groups of foreign-language viewers, is unable to be seen in many parts of the Bay Area, including in San Francisco. Moreover, because of limitations established by rules of the Federal Communications Commission, it is not possible for KEMO to locate an additional transmitter any farther south than Sutro Tower, and there are no adequate transmission facilities to the north of it. Thus, the only feasible method for KEMO to reach these communities and to provide these viewers with meaningful content in the languages in which they are most comfortable is to be able to broadcast from Sutro Tower in addition to its existing location.

Finally, KREV (92.7 FM) is a Top 40 music formatted station which both studios and broadcast facilities located in San Francisco. However, its transmitter located on top of Bellaire Tower on Russian Hill is constrained by location and KREV requested space at Sutro Tower to expand its reach.

New and Relocated Auxiliary Antennas

Auxiliary antennas are used as backups in emergency and other situations when broadcasts cannot be transmitted from a main antenna. KOIT, a current tenant of Sutro Tower, desires to relocate its existing auxiliary antenna from the second level of the tower to the fifth level. Not only will such antenna relocation enhance KOIT broadcast capability, but it will also reduce RF exposure at times when the KOIT auxiliary antenna is needed.

KQED Public Radio, which serves nearly one million listeners each week from its primary transmission facilities at San Bruno Mountain, also desires to install a standby FM auxiliary antenna at Sutro Tower. As shown in the letter from Daniel Mansergh, Director, Radio Engineering and Media Technology for KQED, attached hereto as Exhibit C, the station has identified the need for a geographically diversified transmission system to ensure it will be able to serve the public when the next significant regional emergency occurs.

Furthermore, through its role as the primary FM Emergency Alert System station in the Bay Area region, it is obligated to ensure that timely emergency messages from federal, state and local public safety agencies are properly relayed to the hundreds of radio, TV and cable channels monitoring its broadcast signal. Because of Sutro Tower's location, robust technical infrastructure, redundant power systems, accessibility, and collocated KQED-TV facility, the Site is ideal for an emergency transmission facility to ensure the continued availability of critical emergency information to the public.

Finally, as described above, in addition to its new main broadcast antenna, KTNC intends to locate an auxiliary antenna at Sutro Tower to support its broadcasts in case of emergency or during other instances when its main antennas are inoperable.

FM Translator Antenna

Translator stations simultaneously rebroadcast the signal of a primary station on a different frequency. Those translator stations that provide service within the primary station's protected service area are classified as "fill-in" stations. As shown in the letter from Joe Miller, Vice-President, Signal Development, for the non-profit, Educational Media Foundation, owner of K-LOVE, attached hereto as Exhibit D, a move of the K-LOVE translator antenna from Mount Beacon in Sausalito to Sutro Tower will increase its population coverage by 94%, thereby expanding access to the positive music and programming for which K-LOVE is nationally known.

Community Broadband Network

Fifteen new antennas atop Sutro Tower are being proposed for San Francisco's Community Broadband Network which provides free Internet access for the San Francisco

Housing Authority's developments, several San Francisco Public Library branches, City parks, job training facilities and to underserved areas and/or populations, such as seniors and those with disabilities. This project is not intended to use Sutro Tower to broadcast a Wi-Fi signal straight to residents near the tower, but would utilize an encrypted signal to transmit data to specific sites where a "bridge" would connect to a Wi-Fi transmitter which would propagate the signal at the specific City location. For further information, please see the letter from Michael McCarthy, Community Broadband Manager for the City's Department of Technology, attached hereto as Exhibit E.

Point-to-Point Microwave Antennas

STI is proposing the installation of 16 point-to-point microwave antennas, of which three are receive-only. Six of these would be for the San Francisco Department of Emergency Management in conjunction with the Department's efforts to facilitate the City's participation in the Bay Area Wireless Enhanced Broadband ("BayWEB") network. The BayWEB network is a new interoperable, high-speed voice and broadband data network currently under development to improve communications between public safety and emergency response agencies throughout the Bay Area. It represents one of the first phases of what is eventually anticipated to be a nationwide network serving a similar purpose.

The BayWEB network will incorporate cutting-edge broadband technology to allow public safety and other emergency response personnel operating in the field to access and share a wide range of data, including maps, building plans, photographs, texts and videos. Utilization of the dedicated 700 MHz public safety radio spectrum should also enable the BayWEB network to remain fully operational during events that might otherwise impact the operations of commercial cellular carriers. The Department has identified the Sutro Tower as one of the primary sites in the City for the deployment of equipment to support this effort. Installation of the proposed microwave dish antennas on Sutro Tower will play an important role in ensuring that sufficient coverage is available within the City to support the anticipated needs of those public safety and emergency response personnel, as further described in the letter from Anne Kronenberg, Executive Director, San Francisco Department of Emergency Management, attached hereto as Exhibit F.

Another seven point-to-point antennas are intended as new bridge or airport feeds for all news stations located at the Site to share. As shown in the letter from Bruno Cohen, President/General Manager of the CBS Television Stations Group, including local KPIX television station, attached hereto as Exhibit G, the planned improvements which include such news gathering facilities will greatly enhance the station's news coverage to the benefit of tens of thousands of Bay Area viewers.

The remaining three microwave dish antennas are receive-only. Each will support the existing operations of a specific Sutro Tower television or radio broadcasting tenant.

Receive-only Antennas

Eleven additional new receive-only antennas are being requested by various existing users of Sutro Tower, including news truck coverage for various television stations. Most of these antennas will enhance live news gathering capabilities. Currently, each major news station has only one such antenna on Sutro Tower. As described in the letter from Ashley Gold Messina, Vice President/General Manager of KRON 4, attached hereto as Exhibit H, the additional equipment proposed for installation on Sutro Tower will enable television news stations to expand their coverage areas during catastrophic events and breaking news, facilitating greater public awareness of news events occurring throughout the San Francisco Bay Area.

Camera Mounts

Two camera mounts are being proposed which will be shared by all users to support news gathering. These cameras are used for weather reporting, time lapse of weather systems, and for showing breaking news. As an example of the benefits these new camera mounts will provide, see the letter from Ron Hipschman, the staff scientist at the Exploratorium responsible for the Exploratorium's web, streaming media, and digital asset management servers, attached hereto as Exhibit I.

Construction of Tower Additions

All of the proposed antennas and other attachments will be bolted to either an existing mount or a newly designed mount. All but one of the new mounts are either bolted to the leg or the tower horizontal truss parts of the tower according to the structural engineer's design. The antenna mount for KTNC will be welded to the steel tower framing.

As described in the Addendum to Environmental Impact Report dated December 19, 2014, which analyzed potential impacts of the proposed improvements (the "Addendum"), construction equipment required for the Tower Additions would involve two cranes, a forklift and a skid winch, as well as handheld air-powered wrenches used intermittently to tension the bolts. Proposed construction would comply with the San Francisco Noise Ordinance. Accordingly, the proposed tower improvements would not generate noise levels in excess of established standards.

Generally, these antennas and mounts can be installed relatively quickly. While all of the mounts could be installed in a timeframe of about two weeks, due to the timelines of individual tenants, STI is unable to commit to a schedule of when equipment could be installed. However, to the extent reasonably feasible, STI intends to coordinate such installations in advance. Regardless, STI can promise that all such installations will be completed during weekday windows of 8AM to 5PM.

It is important to note, however, that ongoing maintenance of Sutro Tower will continue to be required regardless of the number of antennas located thereon. As such, rust removal, sandblasting and similar structural maintenance procedures necessary to protect the structural integrity of the tower itself will continue each summer (and as required by the Standard Antenna Conditions recorded against the Site), with additional maintenance on the deeper, interior elements of Sutro Tower (necessitating removing the skin of the beams at various levels and reinforcing or repairing elements and their connections) as needed.

While no noise generating equipment is being installed with the proposed Tower Additions, as described in the Addendum, some tenants will require improvements to their leased space to accommodate the described antenna or accessory equipment, including a small air conditioning unit mounted on a wall on the south side of the transmission building to support the KEMO equipment. As described in the Addendum, any such improvements require separate building and electrical permits.

It has been STI's recent practice to install new outside equipment, such as air conditioners and generators, with equipment having lower noise profiles. Similarly, as such an apparatus reaches the end of its useful life, STI will also replace it with lower noise profile equipment. For example, in 2013, a generator used for backup power was replaced with a model that generates significantly less noise and is not generally audible from the reservoir area or any adjacent neighborhoods. Likewise, we intend to request that our tenants pursue the quietest technology readily available.

Erosion Control Improvements

A variety of additional improvements are also proposed to occur at the Site outside the footprint of the existing transmission building and tower. These improvements include (1) the installation of a new retaining wall, (2) the installation of erosion control and drainage improvements, (3) the construction of a replacement walkway and new associated stairways, (4) the installation of an at-grade, receive-only satellite dish antenna and construction of a new dish foundation associated with the replacement of an existing ground-level antenna serving a similar purpose, and (5) the repair and replacement of the portion of La Avanzada Street owned by STI.

New Retaining Wall/Erosion Control and Drainage Improvements

STI proposes to construct a new concrete retaining wall and related drainage improvements along that portion of the Site southeast of the existing transmission building. These improvements are intended to respond to the soils erosion which has occurred in this area and to prevent such a situation from reoccurring in the future. A number of erosion control improvements are also planned for implementation along the Site's southern hillside to achieve a similar result. While fifteen existing trees currently located within this area are proposed for retention, nine blue gum eucalyptus trees have been designated for removal and subsequent

replacement with nine Coast Live oak trees. A number of stormwater management/drainage improvements are also proposed for implementation in areas of the Site generally south and southeast of the existing transmission building.

New Walkway and Stairways

An existing concrete walkway currently utilized by STI's onsite security staff is located along a portion of the Site's southern hillside. This walkway is no longer in good condition and is difficult for Site personnel to safely access. STI plans to construct a new replacement walkway in this area and to install new stairways to facilitate improved access to/from the walkway and other portions of the Site for a variety of purposes.

Replacement of Ground-Level, Receive–Only Satellite Dish and New Foundation

STI proposes to replace an existing ground-level, receive-only satellite dish antenna approximately 10 feet in diameter with a new ground-level, receive-only antenna measuring roughly 42 feet by 22 feet. The replacement antenna would rest on a newly-installed concrete foundation to be constructed near the location of the existing antenna. The new antenna would receive multiple satellite signals simultaneously to deliver programming to cable television viewers via various existing tenants at the Site.

Improvements to La Avanzada Street

STI owns approximately the upper 320 feet of La Avanzada Street, which serves as the driveway providing vehicular access to and from the Site. Over the years, STI has permitted members of the public to use this portion of La Avanzada Street for pedestrian access and public parking.

The pavement on this section of La Avanzada Street is generally in need of repair, with the road's existing footprint in this area also having narrowed over time due to erosion. STI proposes to repair, repave and widen this section of La Avanzada Street, which is anticipated to result in better stormwater drainage and limits on future erosion, improved access to and from the Site (especially with respect to larger vehicles), and enhanced ability to control public parking (by limiting parking to one side of the road in newly-designated stalls).

To facilitate the proposed roadway improvements and widening, the area adjoining this section of La Avanzada Street would need to be cleared. As part of this process, four existing blue gum eucalyptus trees currently located in proximity to the roadway are proposed for removal.

Neighborhood Communications

STI has been informed that each of the local neighborhood associations with residents living near Sutro Tower, namely Midtown Terrace Owners Association, Twin Peak Improvement Association and Forest Knolls Neighborhood Association, has designated liaisons to receive information on behalf of each such association (the "Liaisons"). Approaching two years ago, we met with such Liaisons at the Site and shared with each of them the plans for both the Tower Additions and the Erosion Control Improvements (the "Plans"), as well as the rationale for each and the environmental review process which we anticipated the City would follow in light of such building permit applications.

Pursuant to an invitation that was sent out to over 3,000 of our neighbors, STI held an Open House at the Site on May 18, 2013. Approximately eighty neighbors, including the Liaisons, toured the Site, reviewed the Plans and asked questions to myself, our staff and consulting engineers and other experts about day-to-day operations and maintenance, as well as the improvements STI intends to make pursuant to the Plans. Please see Exhibit J, attached hereto, which is a recap of the day as sent to the Planning Department thereafter. The Plans were also posted to the Sutro Tower website (www.sutrotower.com) for easy access to the public where they remain accessible to our neighbors.

Although I had the opportunity to meet with various neighbors and the Liaisons over the course of 2013 and 2014, and give them updates on the City's review process for our Plans, STI met with all the Liaisons at the Site a year later on May 20, 2014, both to provide an update on such Plans and the City's review process, and also to review the results of an annual inspection. Thereafter, I continued informal updates with various neighbors and the Liaisons, both in response to their questions and during neighborhood events, such as at the annual holiday event for the Coalition for San Francisco Neighborhoods, the Breakfast Club event for the Willie Brown Institute, etc.

On December 17, 2014, representatives from the City Planning Department's Environmental Division contacted STI and confirmed that the environmental review of the Plans and potential environmental impacts (aka the "Addendum") would be completed and issued on or before December 24, 2014. STI promptly coordinated with its consultants and City representatives to plan a neighborhood meeting for early January ("Neighborhood Meeting"), in order to present such Addendum and related finding to the neighbors.

Notices of the Neighborhood Meeting were prepared and sent to the 613 neighboring owners with properties within 1,000 feet of the Site on December 18, 2014. Please see copies of such notices attached hereto as Exhibit K. Additionally, such notices were forwarded to the Liaisons via email on December 19, 2014, with a request to forward the notices to the membership email lists so as to increase participation.

Sutro Tower, Inc. Proposal for Tower Additions and Erosion Control Improvements
1 La Avanzada Street – at Sutro Tower, Lot 003 in Assessor's Block 2724 –
San Francisco Department of Building Inspection
Application Numbers 201304124452 and 201304124453
San Francisco Planning Department Case No. 2014.1377D
Statement of P. Eric Dausman

The Neighborhood Meeting was held on January 7, 2015, with approximately 30 participants, including the Liaisons. Also present were STI's consulting engineers to answer questions and address any concerns regarding RF exposure, structural integrity of the tower, potential impacts of the erosion control improvements, and any other inquiry raised. STI and its consultants continue to address questions and requests as they arise from the Liaisons and other neighbors and will continue to do so throughout the review and construction process.

P. Eric Dausman
Sutro Tower, Inc.
Vice-President and Chief Operating Officer

January 22, 2015

EXHIBIT A

KTNC-TV Channel 42
1700 Montgomery St, Suite 400
San Francisco, CA 94111
415-398-4242 Office
415-352-1800 Fax

Eric Dausman
Vice President & General Manager
Sutro Tower, INC.
1 La Avanzada Street
San Francisco, CA 94131

3/29/12

Mr. Dausman:

This letter is a follow-up note to your recent conversation with John Busch at Titan Broadcast regarding our intent to refurbish and add a channel 14 antenna at Sutro Tower, below is a preliminary note with rationale as to why this is an action we would like to take for KTNC TV 42. I understand you needed a "first draft" to eventually create the official note which will be submitted to those approving this request, below are my comments.

KTNC TV 42 licensed in Concord, CA is seeking to ADD a new transmitter and antenna at the Mt. Sutro tower located in the city of San Francisco, CA. Our plan is to also keep our current transmitter located in Mt. Diablo, Contra Costa, CA operational to continue serving all our viewers in Contra Costa, Northern Bay Area and the entire Sacramento Valley. Our presence at Mt. Sutro is necessary to better serve the Spanish Speaking audience in the entire Bay Area since our over-the-air transmission from Mt. Diablo is significantly hindered by the Contra Costa range hills, specifically affecting our over-the-air reach of the Alameda, San Francisco, San Mateo and Santa Clara counties. Sixty eight percent (68%) of all Spanish TV Households in the Bay Area live within these counties; we also know that 62% of this 68% are Spanish ONLY and or Spanish dominant TV households relying primarily on Spanish ONLY News and Entertainment.

Let me know if any additional insight is needed and please share with me the final letter before submission, thank for your time and consideration.

Sincerely,

Cesar Angulo
President & General Manager
KTNC TV 42
San Francisco & Sacramento

EXHIBIT B

January 12, 2015

Eric Dausman
Vice President & General Manager
Sutro Tower, Inc.
1 La Avanzada Street
San Francisco, CA 94131

Re: KEMO-TV, Channel 32

Dear Mr. Dausman:

KEMO-TV, Channel 32, owed by Northstar San Francisco License, LLC, is seeking an additional location for a transmitter and antenna on Sutro Tower to be part of a distributed transmission system. KEMO is seeking an additional location to better serve our viewers in the San Francisco-Oakland-San Jose Designated Market Area. KEMO is committed to provide the communities it serves with relevant programming that informs, entertains, and inspires. KEMO's multiple programming streams broadcasts to diverse groups of foreign language viewers. KEMO strives to be a multi-cultural broadcast resource, meeting the needs of multiple groups who often are underserved by existing television stations. Our plan is to broadcast programming in Spanish and several Asian languages including Vietnamese and Chinese, as in other markets where we operate television stations.

Unfortunately, KEMO's current over-the-air signal is seriously constrained by the location of its transmitter and antenna relative to the topography of San Francisco-Oakland-San Jose Designated Market Area. KEMO now broadcasts from Mt. St. Helena, well to the north of the more urban areas of San Francisco. As a result, KEMO is unable to be seen in many parts of the Bay Area that are home to our viewers. In many instances, these are ethnic minorities who already are underserved by existing television broadcasters.

The rules of the Federal Communications Commission provide for stations to extend their service to communities such as those described through the use of additional transmitters placed within their assigned service areas in regions their signals do not reach. Because of limitations established by the FCC rules, it is not possible for KEMO to locate an additional transmitter any farther south than Sutro Tower. Thus, the only feasible method for KEMO to reach these communities and to provide these viewers with meaningful content in the languages in which they are most comfortable is to be able to broadcast from Sutro Tower in addition to its existing location. The programming KEMO provides, at no charge to its over-the-air viewers, not only includes entertainment but also news, public service announcements, emergency warnings, and children's shows.

Today, within the City of San Francisco, only those with a tall rooftop antenna aimed toward Mt. St. Helena can receive the KEMO signal. With the addition of the new transmitter and antenna at Sutro Tower, virtually all of the more than 800,000 people in the city will be able to watch KEMO programming using just indoor antennas. Broadcasting from Sutro Tower, KEMO will be able to be viewed by an additional 2.5 million people through the Bay Area

(including the City of San Francisco), more than one-half of whom are members of minority groups. The addition of Sutro Tower to KEMO's broadcast distribution system will enable KEMO to provide free, over-the air television service to a significant number of people who today cannot receive its signal.

We are happy to provide you with any additional information that you may require and appreciate your timely consideration of our request to locate on Sutro Tower.

Very truly yours,

Northstar San Francisco License, LLC

By: _____
Mark P. Hirschhorn
Vice President

EXHIBIT C

KQED

May 23, 2012

Attn: Eric Dausman
Vice President and General Manager
Sutro Tower, Inc.
1 La Avanzada Street
San Francisco, CA 94131

Dear Eric:
As we discussed, KQED-FM is interested in locating an emergency auxiliary transmission facility at Sutro Tower. As KQED has grown to become a primary source of news and information in the Bay Area, directly serving nearly 1 million listeners each week, we have identified the need for a geographically diversified transmission system to ensure that we will be able to serve the public when the next significant regional emergency occurs. Furthermore, through our role as the primary FM EAS station in the Bay region, we are obligated to ensure that timely emergency messages from federal, state and local public safety agencies are properly relayed to the hundreds of radio, TV and cable channels monitoring our broadcast signal.

Through our disaster planning exercises, we have developed several scenarios where operation of our primary transmission facilities at San Bruno Mountain would be compromised in the event of a major disaster, primarily due to loss of power or structural damage to the towers supporting our antennas. After evaluating our options, we have determined that Sutro Tower, because of its location, robust technical infrastructure, redundant power systems, accessibility, and collocated KQED-TV facility, would be the ideal site for an emergency transmission facility to ensure the continued availability of critical emergency information to the public.

We look forward to working with you on this important project.

Sincerely,

Daniel Mansergh
Director, Radio Engineering and Media Technology

EXHIBIT D

K-LOVE. Air1 RADIO

EDUCATIONAL MEDIA FOUNDATION

January 6, 2015

Eric Dausman, Vice President & General Manager
Sutro Tower, Inc.
1 La Avanzada Street
San Francisco, CA 94131

Re: Move of K205BM's Antenna

Dear Mr. Dausman;

The move to Mt. Sutro is a big plus for us and the community! The move allows us to take advantage of the "FCC's fill-in" rules that are not available on K205BM's historic transmitter site (Mount Beacon). These rules allow for an increase in power from 13 watts to 50 watts resulting in greater San Francisco area building penetration and an increase in the population coverage by 94% (from 447,000 to 868,000 within the FCC protected contours). The Sutro Tower is in the ideal location to maximize the coverage from this longstanding FM translator, which has served the area since 1989.

K-LOVE's purpose is to serve our listeners with positive music and programming with a goal of making our community better. San Francisco and the Bay Area will benefit not only from the positive music programming but the community service that K-LOVE provides as well.

When the K-LOVE city of Joplin, MO suffered a deadly tornado, K-LOVE broadcast interviews with local crisis response teams, public safety officers and disaster relief organizations such as the Red Cross. When K-LOVE listeners in Denver, CO were concerned about the Lower North Fork wild fire, we provided containment updates and evacuation instructions. And when a water main broke in Kansas City, K-LOVE promoted the public with news of the government boil order.

What's more, the K-LOVE Public Affairs Reporters routinely reach out to local leaders to address ongoing local challenges. For listeners under the K205BM signal (KLVR – Middletown, CA) we've broadcast interviews with local government officials, spotlighted community assets such as the library and promoted the issues of youth and housing through causes such as CASA and Habitat for Humanity, respectively.

We look forward to increasing our service to the area with the proposed revised signal of K205BM. We appreciate your consideration!

Sincerely,

Joe Miller, Vice President, Signal Development
Educational Media Foundation

EXHIBIT E

City & County of San Francisco
Department of Technology
Powered by Innovation

One South Van Ness Avenue, 2nd Floor
San Francisco, CA 94103-0948
Office: 415-581-4001 • Fax: 415-581-4002

March 30, 2012

Eric Dausman
Vice President & General Manager
Sutro Tower, Inc.
1 La Avanzada Street
San Francisco, CA 94131

Eric:

Thank you for allowing the installation of wireless radios to support the expansion of San Francisco's Community Broadband network (CBN) on Sutro Towers. These radios will be used to expand broadband access in San Francisco.

The CBN provides Internet access for a wide range of community organizations, City initiatives and low income housing sites. The network is part of San Francisco's Department of Technology digital inclusion and public wifi project. Here is a brief list of some of the sites currently receiving Internet access via the CBN:

- All of San Francisco Housing Authority's developments
- Literacy for Environmental Justice EcoCenter am
- Several San Francisco Public Library branches
- Sunset Neighborhood Beacon Center

The CBN provides Internet coverage for many sites through wireless bridges operating in the 5Ghz range. Use of this unlicensed frequency is continuing to grow and so does the amount of interference. The installation of radios at Sutro Towers will help to sustain the CBN as a provider of

The Department of Technology is also expanding Internet access to 45 senior and disabled sites. This expansion is supporting computer access and training for seniors and those with disabilities. There are some sites we are not able to provide Internet access to because of their location. They do not have a "line of sight" to one of our core locations. Installation of radios at Sutro will enable us to provide Internet access at these and other community sites.

DT is working on having the CBN be part of the Cities disaster recovery plans. As part of the developing strategy the CBN would provide public Internet access. Sites such as Sutro that have backup power and have a DT fiber connection would be able to provide Internet access to the public via wireless bridges.

Once again thank you for your support of San Francisco's Department of Technology work to expand broadband access.

All the best,

Michael McCarthy

Community Broadband Manager

Printed on recycled paper

EXHIBIT F

Edwin M. Lee
Mayor

Department of Emergency Management
1011 Turk Street, San Francisco, CA 94102

Division of Emergency Communications
Phone: (415) 558-3800 Fax: (415) 558-3843

Division of Emergency Services
Phone: (415) 487-5000 Fax: (415) 487-5043

SAN FRANCISCO DEPARTMENT OF EMERGENCY MANAGEMENT

Anne Kronenberg
Executive Director

January 21, 2015

Eric Dausman
Vice President & General Manager
Sutro Tower, Inc.
1 La Avanzada Street
San Francisco, CA 94131

Dear Mr. Dausman,

The San Francisco Department of Emergency Management, in collaboration with the Department of Technology, would like to acknowledge the opportunity to expand emergency communications capabilities for San Francisco first responders. We thank you for allowing the City to utilize Sutro Tower to install microwave dishes that will improve the reliability of our public safety radio systems.

San Francisco first responders rely heavily on push-to-talk radio communications, and use the system every day to respond to incidents and major emergencies. The ability to utilize Sutro Tower, in addition to the equipment at the Twin Peaks location, allows for better redundancy in communications, and better "line of sight" to radios throughout the City. It is of the greatest importance that our emergency radio communications capabilities are maintained at the highest level.

On behalf of both my Department, and our City's first responders, please accept my sincere gratitude for your support of our mission critical system.

Sincerely,

Anne Kronenberg
Executive Director

cc. Miguel Gamino, Executive Director Dept of Technology and City CIO

EXHIBIT G

KBCW | KSTW | KPIX CBS TELEVISION STATIONS GROUP

January 7, 2015

Mr. Eric Dausman
General Manager
Sutro Tower Incorporated
1 La Avanzada Street
San Francisco, CA 94131

Re: Tower Upgrades

Dear Eric:

On behalf of the KPIX staff and tens of thousands of our viewers around the Bay Area, I write to endorse the earliest possible resolution of our Building Permit before the City of San Francisco. The planned improvements to Sutro Tower, which include news gathering facilities and cameras, will greatly enhance our news coverage. By extension, our viewers will be better informed, particularly in public safety situations.

Please let me know if there is anything I can do to expedite the process.

Sincerely,

Bruno Cohen
President/General Manager

THE CW BAY AREA | CW11 | CBS 5
855 BATTERY ST.
SAN FRANCISCO CA 94111
T 415 362 5550 F 415 765 8844

EXHIBIT H

KRON 4
The Bay Area's News Station

Eric Dausman
Vice President & COO
Sutro Tower, Inc.
1 La Avanzada Street
San Francisco, CA 94131

January 10, 2015

Eric,

The public benefit of the additional equipment proposed for Sutro tower will allow our coverage areas to increase during catastrophic events and breaking news. This will allow the stations to keep the public aware of situations involved during everyday or major events in and around San Francisco.

Also, with the placement of cameras on the tower we will stream to the internet and use the information in our newscasts to enhance the public view of San Francisco and the surrounding counties. With new technology going in place, this allows the public access from their phones to be able watch broadcasts and tower cameras.

Best,

Ashley Ashley Messina

Ashley Gold Messina
Vice President/General Manager
KRON4, The Bay Area's News Station

KRON4
1001 VAN NESS AVENUE
SAN FRANCISCO, CA 94109
(415) 441-4444 (415) 561-8759

EXHIBIT I

Board of Directors

George W. Cogan
Chairman

Shona L. Brown
Vice-Chair

William S. Fisher
Vice-Chair

Vincent L. Ricci
Secretary

Lynn C. Fritz
Treasurer

Ravin Agrawal
Gary Bengier
Jennifer Caldwell
Barbara A. Carbone
Chris Cox
Tom DeFilipps
Anthony F. Earley, Jr.
Greg Flynn
Mickey Hart
F. Scott Hindes
Reid Hoffman
Jeff Huber
Michael R. Jacobson
Richard Laiderman
Jude P. Laspa
Divesh Makan
Phil Marineau
William F. Mellin
Kenneth G. Moore
Sandra L. Otellini
Craig Silverstein
Nat Simons
E. Payson Smith, Jr.
Aaron Vermut
R. Sanders Williams, MD
Stanley Wojcicki, PhD
Michelle Yee
Dan Yue

Directors Emeriti

William K. Bowes, Jr.
Chairman Emeritus

F. Van Kasper
Chairman Emeritus

Ann S. Bowers
Paul M. Cook
C. Richard Kramlich
Peter C. Wendell

Ex Officio

Dennis M. Bartels, PhD
Executive Director

Cameron Phleger
Exploratorium Lab

To the Planning Commission

Re: Sutro Tower Proposal for Tower Additions

San Francisco Planning Department Case No. 2014.1377D

As a 44-year physicist and educator at The Exploratorium, I support Sutro Tower's project to add new antennas. The Exploratorium is San Francisco's premier museum of science, art, and human perception; we have a special appreciation for the benefits the new antennas will bring.

For the city as a whole, the new antennas will help to provide wifi service to San Francisco Housing Authority residents, enabling thousands of our neediest neighbors to have fuller access to information. They also will enhance public safety, public broadcasting, and emergency response. These antennas will also provide data to some branches of the San Francisco Public Library to enhance their abilities to provide wifi internet access to its patrons.

Specifically for the Exploratorium, the new antennas will provide greater access to weather data, air quality data, images, and other measurements we use to help explain the Bay Area to our thousands of visitors.

We have worked with the staff of Sutro Tower in the past, and they are highly professional, dedicated to safety, and helpful to all educational requests and endeavors. We recently did a short video piece about Sutro tower which you can find here:

http://www.exploratorium.edu/tv/index.php?project=104&program=1521&type=clip

The new antennas are good for San Francisco and good for the Exploratorium.

Please do not hesitate to call me if you need further information.

Sincerely,

Ron Hipschman
Exploratorium
Pier 15/17
San Francisco, CA 94111

tel: 415-871-3736 (cell)

EXHIBIT J

Sutro Tower, Inc.
1 La Avanzada St.
San Francisco, CA
94131-1124

tel: 415-681-8850
fax: 415-681-6754

www.sutrotower.com

May 20, 2013

Mr. Rick Crawford, Mr. Omar Masry
San Francisco Planning Department
1650 Mission Street, 4th Floor
San Francisco, CA 94103

Dear Rick and Omar:

In follow up to our meeting of April 30th, and follow-up communications thereafter, we are pleased to report that approximately eighty neighbors attended the Sutro Tower open house on Saturday May 18th from 10 a.m. to 1 p.m. to learn about the two applications filed with the Department of Building Inspection: 201304124452-F, for new antennas and other attachments on Sutro Tower; and 201304124453-F, for site improvements on the property surrounding the tower.



Clockwise from top left: A resident review the plans; neighbors view photo simulations of proposed attachments; 98-year-old Edith Fried was the oldest guest; visitors signing in as they arrive.

As mentioned previously, letters were sent via first-class mail to more than 3,700 households in the Midtown Terrace, Twin Peaks and Forest Knolls neighborhoods inviting residents to attend the open house.

Attendees had the opportunity to examine the detailed plans for the proposed attachments and site improvements, speak with engineers and executives who developed the plans, take photos, and tour the facility, including a television station control room. A shuttle service brought visitors up the hill to the tower, and refreshments were served.

Please let me know if you have any questions about the open house or this project generally.

Sincerely,

Eric Dausman
Vice President and General Manager

EXHIBIT K

SUTRO TOWER, INC.

NOTICE OF COMMUNITY MEETING
SUTRO TOWER ANTENNA ADDITIONS AND
SITE AND EROSION CONTROL IMPROVEMENTS

WEDNESDAY, JANUARY 7, 2015
7:00 P.M.
ST. JOHN ARMENIAN CHURCH HALL
275 OLYMPIA WAY

Sutro Tower, Inc. ("STI") has scheduled a community meeting to provide additional information and to answer any questions associated with work covered under pending building permit applications filed by STI. Not long after the filing of these permits in 2013, STI hosted an open house event at which neighbors had the opportunity to view STI's plans. As such, community members may already be familiar with the below described scope.

These permits would authorize STI to allow its tenants to install up to 50 broadcast and reception antennas, microwave dish antennas and camera mounts at various levels on the Sutro Tower, and replacement and relocation of one existing auxiliary radio antenna to a higher level on the tower (collectively, the "Antenna Additions"). In part, the Antenna Additions are intended to ensure public accessibility to public broadcasting in an emergency, and for certain television station tenants to provide increased access to diverse groups of foreign language viewers.

Most of the Antenna Additions are smaller-scale antennas and equipment, including 15 antennas for San Francisco's Community Broadband Network which provides Internet access for the San Francisco Housing Authority's developments and several San Francisco Public Library branches. The Antenna Additions also include six dish antennas requested by the BayWEB emergency response communication system that would provide region-wide interoperable communications for law enforcement and first responders.

In addition, a number of improvements would occur at ground level at the STI facility, including the installation of a retaining wall, implementation of a number of on-site erosion control and drainage improvements, installation of several stairways and walkways, repair, replacement and widening of a portion of the existing driveway and installation of an at-grade receive-only satellite dish antenna and foundation to replace an existing smaller ground-level antenna serving a similar purpose (collectively, the "Site Improvements").

In October of 2008, the Planning Commission certified an Environmental Impact Report ("2008 EIR") which determined that a project known as the DTV Conversion Project would not result in any significant environmental impacts. The San Francisco Planning Department is preparing an Addendum to this 2008 EIR to evaluate environmental impacts, if any, associated with the Antenna Additions and the Site Improvements. While this document has not yet been published, the Planning Department anticipates that it will be

[Continued on other side]

issued at the end of December, 2014. Thus, STI expects such Addendum will be available for review at this community meeting.

A representative from the engineering firm of Hammett & Edison, Inc. will be available to discuss the results of a Radio Frequency study performed for the Antenna Additions. The structural engineering firm of Simpson, Gumpertz & Heger will have a representative available to discuss its design and analyses of the Antenna Additions. Finally, a representative from the civil engineering firm of Sandis will also be available to discuss their designs for the Site Improvements.

Please note that the upcoming meeting is being hosted by STI for informational purposes only. It is not a public hearing on either the Antenna Additions or the Site Improvements. In the near future, you will be receiving a separate notice from the Planning Department concerning a public hearing at which the Planning Commission will consider review of the projects.

If you have any questions concerning either the Antenna Additions or the Site Improvements prior to the upcoming community meeting, please contact Omar Masry from the Planning Department at (415) 575-9116 or Kristen Thall Peters from Cooper, White & Cooper LLP at (415) 433-1900. STI previously provided an informal briefing on the projects to the liaisons from the Midtown Terrace Owners Association, the Twin Peaks Improvement Association, and the Forest Knolls Neighborhood Organization. These individuals may also be able to provide you with additional information.

SUTRO TOWER, INC.

NOTICE OF COMMUNITY MEETING SPECIFIC TO RESIDENTS OF FAIRVIEW COURT, PANORAMA DRIVE AND DELLBROOK AVENUE REGARDING SOUTHEAST EROSION CONTROL IMPROVEMENTS

WEDNESDAY, JANUARY 7, 2015
6:30 P.M.
ST. JOHN ARMENIAN CHURCH HALL
275 OLYMPIA WAY

Sutro Tower, Inc. ("STI") has scheduled a community meeting specific to residents of Fariview Court, Panorama Drive and Dellbrook Avenue (the "Southeast Neighbors") to provide information associated with work covered under a pending building permit application filed by STI. Among other things, this permit would authorize STI to install improvements at ground level on the south and east sides of the STI facility, including the installation of a retaining wall, implementation of a number of on-site erosion control and drainage improvements, and installation of several stairways and walkways (collectively, the "Southeast Site Improvements"). STI and its consultants believe that the Southeast Site Improvements will improve existing southeast erosion issues.

The Southeast Site Improvements will also be discussed at a later meeting with the larger surrounding community as part of other ground level site and erosion control improvements at the STI facility. However, as questions have arisen from Southeast Neighbors about the specific impact of the Southeast Site Improvements upon their properties, STI wanted to provide an opportunity for the Southeast Neighbors to discuss such improvements with a representative from Sandis, the civil engineering firm that designed them and who can answer questions specific to any such concerns.

In October of 2008, the Planning Commission certified an Environmental Impact Report ("2008 EIR") which determined that a project known as the DTV Conversion Project would not result in any significant environmental impacts. The San Francisco Planning Department is preparing an Addendum to this 2008 EIR to evaluate environmental impacts, if any, associated with the larger project, including the Southeast Site Improvements. While this document has not yet been published, the Planning Department anticipates that it will be issued at the end of December, 2014. Thus, STI expects that such Addendum will be available for review at this community meeting.

Please note that the upcoming meeting is being hosted by STI for informational purposes only. It is not a public hearing on the Southeast Site Improvements. In the near future, you will be receiving a separate notice from the Planning Department concerning a public hearing at which the Planning Commission will consider review of the project.

If you have any questions concerning either the Southeast Site Improvements prior to the upcoming community meeting, please contact Omar Masry from the Planning Department at (415) 575-9116 or Kristen Thall Peters from Cooper, White & Cooper LLP at (415) 433-1900. STI previously provided an informal briefing on the project to the liaisons from the Midtown Terrace Owners Association, the Twin Peaks Improvement Association, and the Forest Knolls Neighborhood Organization. These individuals may also be able to provide you with additional information.

From:	Tom Radulovich
To:	Masry, Omar (CPC)
Cc:	Craig Dawson; Nicole Schneider; matt@sfparksalliance.org
Subject:	Sutro Tower antenna additions and site and erosion control improvements (Application #2014.1377)
Date:	Thursday, January 15, 2015 9:05:30 AM

Dear Mr. Masry,

On behalf of Livable City, we submit the following comments on the proposed project at Sutro Tower.

Sutro Tower is a large utility installation located in an RH-1(D) district. The proposed project would add up to fifty antennas to the site, which is a major intensification of this use.

As conditions of approval for the proposed project, we ask that the Planning Department seek agreement with Sutro Tower, Inc. on the following conditions:

1. **Public Access.** This site forms a link in the chain of hilltop open spaces stretching from Glen Park to Golden Gate Park. Plans to connect these open spaces into a continuous and publicly-accessible belt of parks have been made since the 1950s, and include the plan for the Bay Area Ridge Trail, the recently-adopted Recreation and Open Space Element (ROSE), and the Planning Department's Green Connections plan. Public access through the site, on the existing trail looping west and south of the tower from La Avanzada Street to the SFPUC's Twin Peaks Reservoir, would complete a connection between the existing trail loop around Twin Peaks Reservoir and the City's Interior Park Belt north of La Avanzada Street. This link would connect Mount Sutro's trail system with that of Twin Peaks, and create an important link between two major public spaces. This public access, and an agreement for maintenance of the trail, should be secured as part of this proposed project.
2. **Vegetation management.** Sutro Tower is surrounded by the aging Eucalyptus plantations. These plantations are aging, and many trees are stressed and dying. Sutro Tower, Inc. should work collaboratively with the City's Natural Areas program on a vegetation management plan that fosters the ecological health of these lands and mitigates any hazards (fire, erosion, falling trees, etc.) that sick or dead trees pose to surrounding neighbors or the public. A good vegetation management plan can mitigate those risks and make the plantings healthier, as well as steward or reintroduce native plants and animals on the site, and help create a biodiversity corridor connecting two large blocks of habitat on Mt. Sutro and Twin Peaks.
3. **Right of First Refusal.** Should the antenna use ever cease on all or part of the site, the City should be granted the right of first refusal to purchase the site as public open space, consistent with the General Plan Recreation and Open Space Element and Green Connections plan.

We believe that the above conditions are reasonable, and further the City's plans and policies. They afford Sutro Tower, Inc. the full economic use of the site and will not interfere at all with the antenna installation and operation, while providing important public benefits to surrounding neighbors and residents of San Francisco – human and non-human. Further, completing this Ridge Trail connection provides a benefit to the entire Bay Area.

Sincerely,

Tom Radulovich
Executive Director
Livable City
433 Natoma Street, Suite 240
San Francisco CA 94103
415 344-0489
www.livablecity.org
tom@livablecity.org

From:	Amber Hasselbring
To:	Masry, Omar (CPC)
Cc:	Tom Radulovich; Craig Dawson; Nicole Schneider; matt@sfparksalliance.org
Subject:	Sutro Tower antenna additions and site and erosion control improvements (Application #2014.1377)
Date:	Thursday, January 15, 2015 12:40:03 PM
Attachments:	ATT00001.htm Sutro Tower connection.png ATT00002.htm Notice of Community Meeting for Erosion Control (2).DOC ATT00003.htm Notice of Community Meeting (3).DOC ATT00004.htm

---

Dear Mr. Masry,

On behalf of Nature in the City, we support and reiterate the comments submitted *(with our addendum in italics)* by Livable City on the proposed project at Sutro Tower.

Sutro Tower is a large utility installation located in an RH-1(D) district. The proposed project would add up to fifty antennas to the site, which is a major intensification of this use.

As conditions of approval for the proposed project, we ask that the Planning Department seek agreement with Sutro Tower, Inc. on the following conditions:

1. **Public Access.** This site forms a link in the chain of hilltop open spaces stretching from Glen Park to Golden Gate Park. Plans to connect these open spaces into a continuous and publicly-accessible belt of parks have been made since the 1950s, and include the plan for the Bay Area Ridge Trail, the recently-adopted Recreation and Open Space Element (ROSE), and the Planning Department's Green Connections plan.

Nature in the City has worked for three years on creating the Green Connections Plan, which when implemented will create 25 connections between parks and open spaces in San Francisco. These connections will have three-fold benefits: 1) they will provide safe paths of travel for pedestrians of all ages providing greater access to our city's natural spaces, 2) these connections will create contiguous ease for bicyclists also seeking to access parks, 3) the sidewalk gardens, trees, bulb-outs, and traffic calming design for public streets will provide habitat for insectivore birds, butterflies, and our locally-threatened pollinator species.

These connections, such as the proposed mapped trail system provided by Livable City, accentuate that natural spaces are ripe for public access in ways that celebrate, while at the same time being good stewards for the natural spaces they traverse.

We believe that the interconnection of residential connections with the Green Connections Plan and trails in our natural areas must be complete and connected as our population, quality of life, and access to dynamic ecosystems increases.

Public access through the site, on the existing trail looping west and south of the tower from La Avanzada Street to the SFPUC's Twin Peaks Reservoir, would complete a connection between the existing trail loop around Twin Peaks Reservoir and the City's Interior Park Belt north of La Avanzada Street. This link would connect Mount Sutro's trail system with that of Twin Peaks, and create an important link

between two major public spaces. This public access, and an agreement for maintenance of the trail, should be secured as part of this proposed project.

2. **Vegetation management.** Sutro Tower is surrounded by the aging Eucalyptus plantations. These plantations are aging, and many trees are stressed and dying. Sutro Tower, Inc. should work collaboratively with the City's Natural Areas program on a vegetation management plan that fosters the ecological health of these lands and mitigates any hazards (fire, erosion, falling trees, etc.) that sick or dead trees pose to surrounding neighbors or the public. A good vegetation management plan can mitigate those risks and make the plantings healthier, as well as steward or reintroduce native plants and animals on the site, and help create a biodiversity corridor connecting two large blocks of habitat on Mt. Sutro and Twin Peaks.

In addition to this, public information and ecosystems-based health education will need to be addressed. Groups in San Francisco tend toward not removing trees at all costs. Trees, perennial grasses, shrubs and wildflowers can be the additional benefit of tree removals, though to some groups, the immediate shock of tree removal seems to outweigh the long-term sustainability, beauty, and health of our urban ecosystems.

3. **Right of First Refusal.** Should the antenna use ever cease on all or part of the site, the City should be granted the right of first refusal to purchase the site as public open space, consistent with the General Plan Recreation and Open Space Element and Green Connections plan.

Undeveloped and open space land will continue to be under threat as our city increases its density. In addition to this, a historic connection to natural places is often disregarded, as young people from distant places move and temporarily build their lives here. We have seen that the public has not shown up in big numbers in favor of retaining open space and preserving its ecosystem health-giving properties. So the city, in concordance with the General Plan Recreation and Open Space Element and Green Connections plan, be given the opportunity to purchase the land to benefit all San Franciscans and for future generations to enjoy.

We believe that the above conditions are reasonable, and further the City's plans and policies. They afford Sutro Tower, Inc. the full economic use of the site and will not interfere at all with the antenna installation and operation, while providing important public benefits to surrounding neighbors and residents of San Francisco – human and non-human. Further, completing this connection to the Bay Area Ridge Trail provides a benefit to the entire Bay Area.

Sincerely,



Parnassus Ave
Medical Sciences
Saunders Court
UC Hall
Nursing
Dental School
Public Parking
Institute for Regenerative Medicine
EH&S
TRAFFIC
Edgewood Ave
Belmont
Grattan Plgd.
Rivoli
Site of La Rochette Nursery
PRIVATE
17th St
To Mt. Olympus, Buena Vista Park, Panhandle & Presidio
STAIRS
Woods Lot
Woodland Creek
Historic
Interior Greenbelt
Carmel
UCSF Mt. Sutro Open Space Reserve
Edgewood
Stanyan
Tank Hill Open Space
Clayton St
Shrader
Dead End & Poison Oak
Chancellor's Residence
Fairy Gates
Belgrave
Not maintained
North Ridge
Mystery
Ridge
Johnstone
Clarendon Ave
Twin Peaks Blvd
Crown
Aldea Center
West Ridge
ROTARY MEADOW
MOUNT SUTRO
East
Aldea San Miguel Housing
Mountain Spring
Pemberton
Villa
Graystone
STEEPSTAIRS
Nike Road
Behr
BLIND CURVE! TRAFFIC
Interior Greenbelt
St. Germain
Glenbrook
Raccoon
Oakhurst
Crestmont
South Ridge
Quarry Road Trail
Nursery
Christopher Drive
Palo Alto
SF Fire Dept.
Burnett
STEEP, NOT RECOMMENDED
Woodhaven
Knolls
Twin Peaks Reservoir
SFPUC
Summit Reservoir
Oak Park
Glenhaven
Forest
Clarendon Ave
Dellbrook
Sutro Tower
Tower
Farview
POISON OAK
SF Dept of Real Estate
Forest Knolls
Blairwood
Interior Greenbelt
Twin Peaks Blvd
Christmas Tree Point Overlook
Christopher
Clairview
Marview
Clarendon School
Warren Drive
Panorama
Aquavista
Twin Peaks Natural Area
Midtown Terrace

From:	Erik
To:	Masry, Omar (CPC)
Subject:	Sutro Tower
Date:	Tuesday, January 20, 2015 3:33:10 PM

Dear Mr. Masry,

In recent years the work done to Sutro Tower has been damaging our quality of life. I've been in contact with Mr. Dausman and have already expressed my concerns to him. Even though the end of the last erosion work has been more considerate towards people of Midtown Terrace, I'm against any additional antenna installation and would strongly suggest new rules be taken regarding the erosion removal work (respecting San Francisco's and the World Health Organization's noise limits, not working on weekends, etc).

Using a professional tool, we have recorded the noise volume generated by the use of loud tools on Sutro Tower. At times, and for many minutes in a row, these machines add more than 30 decibels to the ambient sound on our property (sometimes even before 9am on Saturdays). This has been damaging our quality of life but it seems it is also breaking article 29 of the San Francisco police code:
http://www.sfdph.org/dph/files/EHSdocs/ehsNoise/GuidelinesNoiseEnforcement.pdf

This Article 29 refers to the World Health Organization's noise limits, which serves to protect human health and its well being.
(http://www.who.int/docstore/peh/noise/Comnoise-4.pdf)

I've been living in Midtown Terrace for 14 years and we never had such problems until recently. Because of this noise, we have damages to our quality of life, our health and our property value.

Sincerely,
Erik Nilsson

From:	mharit@aol.com
To:	Masry, Omar (CPC); Yee, Norman (BOS)
Subject:	Sutro Tower Erosion Plan - Letter from Midtown Terrace Resident
Date:	Saturday, January 17, 2015 3:50:28 PM

This letter serves to register my opposition to the proposed Sutro Tower Erosion plan and proposal to add 50 more antennas to the existing structure.

Living under Sutro Tower is slowly turning into a nightmare. The steps taken to maintain Sutro Tower in its current form, with months and months of noisy scraping and repair work have seriously decreased our quality of life in our home. We frequently work from home, and what should be a haven from the harsh outside world becomes dreadful as we are forced to keep our windows shut to try to minimize noise (it still gets through) and this for months on end.

Additionally, now adding more antennas would affect the problems we already have with disruption to our electronic equipment and negative effects on our health.

The constant creep of Sutro Tower, where they have incrementally added more antennas, preferring to ask for forgiveness than permission in some cases, is very concerning to us. There are other sites that can be used for the tower's antennas, not least of which in Millbrae, where there are no residents in close proximity.

Please vote AGAINST the Sutro Tower addition of antennas, and focus instead on relocating existing antennas to another site, with the thought of retiring the Tower in the near future.

Thanks,
Muriel Haritchabalet

TOWER ANTENNA ADDITIONS
SUTRO TOWER
SAN FRANCISCO, CALIFORNIA

VICINITY MAP

PROJECT SCOPE:

INSTALLATION OF NEW ANTENNAS AND OTHER EQUIPMENT ON SUTRO TOWER. A LIST OF ALL EQUIPMENT IS PROVIDED ON SHEET S1.0

INSTALLATION OF NEW ANTENNAS AND OTHER EQUIPMENT ON SUTRO TOWER. A LIST OF ALL EQUIPMENT IS PROVIDED ON SHEET S1.0

LIST OF DRAWINGS

S0.0 TITLE SHEET, VICINITY MAP & LIST OF DRAWINGS
S0.1 GENERAL NOTES, ABBREVIATIONS & LEGEND

S1.0 TOWER REFERENCE PLAN & ELEVATION
S1.1 ANTENNA CUT SHEETS
S1.2 ANTENNA CUT SHEETS
S1.3 ANTENNA CUT SHEETS
S1.4 ANTENNA CUT SHEETS
S1.5 ANTENNA CUT SHEETS

S2.1 2ND LEVEL FRAMING
S2.2 3RD LEVEL FRAMING
S2.3 4TH LEVEL FRAMING
S2.4 5TH LEVEL FRAMING
S2.5 6TH LEVEL FRAMING

S3.1 ANTENNA MOUNTS, STACKS "A", "B", AND "C"
S3.2 ANTENNA MOUNTS, STACKS "A", "B", AND "C"
S3.3 NDTV AUXILIARY ANTENNA ELEVATIONS AND SECTIONS
S3.4 AUXILIARY ANTENNA TOP MOUNT LEVEL 4 DETAILS

S5.1 DETAILS

SIMPSON GUMPERTZ & HEGER
Engineering of Structures and Building Enclosures

Simpson Gumpertz & Heger Inc.
The Landmark @ One Market, Suite 600
San Francisco, California 94105
415.495.3700 fax: 415.495.3550
www.sgh.com

Boston
Los Angeles
New York
San Francisco
Washington, DC

Consultant

No.	Date	Description	By
0		ISSUED FOR PERMIT	ROH

TOWER ANTENNA ADDITIONS
SUTRO TOWER
1 LA AVANZADA ST
SAN FRANCISCO
CALIFORNIA
94131
Project

TITLE SHEET
VICINITY MAP
&
LIST OF DRAWINGS
Drawing Title

Commission	Checked	Date
067199.06	BW	09/26/11
Drawn	Approved	Scale
GV	ROH	NONE

REGISTERED PROFESSIONAL ENGINEER
RONALD D. HAMBURGER
No. 2951
STRUCTURAL
STATE OF CALIFORNIA
Seal

Drawing No.
S0.0

GENERAL

1. General notes and typical details apply to all structural features, unless otherwise indicated.

2. If certain features are not fully shown or called out on the drawings or in the specifications, their construction shall be of the same character as for similar conditions.

3. Dimensions shall not be scaled off of the drawings.

4. All work shall conform to minimum standards of the 2010 California Building Code, of any codes listed in the drawings or specifications and of any regulating agencies which have authority over any portion of the work, including the State of California Division of Industrial Safety.

5. Openings, pockets, etc. shall not be placed in structural members unless specifically detailed on the structural drawings. Notify the structural engineer when work requires openings, pockets, etc. in structural members not shown on the structural drawings.

6. The contractor shall be responsible for coordinating the work of all trades and shall check all dimensions and holes and openings required in structural members. All discrepancies shall be called to the attention of the structural engineer and shall be resolved before proceeding with the work.

7. The contract documents represent the finished structure. They do not indicate the method of construction. The contractor shall provide all measures necessary to protect life and property during construction. Such measures shall include, but are not limited to, bracing and shoring for loads due to construction equipment and materials. Observation visits to the site by the structural engineer shall not include inspection of the above items.

8. Construction materials shall be spread out if placed on framed floors or roofs. Load shall not exceed the design live load per square foot. Provide adequate shoring where overload is anticipated.

9. The contractor shall use extreme caution to protect all conduits, pipes, ducts, architectural finishes and utilities not indicated as being removed from damage during construction and shall restore all damaged or otherwise affected elements to their preconstruction condition, unless otherwise noted.

10. The Sutro Tower transmission facilities must remain in operation at all times during the construction period. Contractor shall submit a written work plan indicating the proposed sequence and schedule of work and specific operations to be conducted, to Sutro Tower for review, prior to performing any work on site. The work plan shall be revised and resubmitted on a weekly basis to alert Sutro Tower as to the progress of work accomplished to date and current schedule for performing additional work.

11. Sutro Tower is a radio transmission facility and emits high energy radio waves. The contractor shall be responsible for determining and implementing appropriate protective measures for personnel working on site.

12. The contractor shall maintain a fire watch and employ the necessary protective measures when welding near flammable materials.

13. The removal, cutting, drilling, etc. of existing work shall be performed with care in order not to jeopardize the structural integrity of the structure. If structural members or mechanical, electrical or architectural features not indicated for removal interferes with the new work, the Engineer shall be notified immediately and prior approval shall be obtained before removal of members.

14. The contractor shall promptly repair any damage caused during operations, using materials and workmanship similar to that which was damaged.

15. All removed items, materials and debris, unless otherwise noted, shall be removed promptly from the site and disposed of in a legal manner.

16. Install antenna on masts using manufacturer's standard connection hardware in accordance with manufacturer's specifications.

STRUCTURAL STEEL & MISC. METALS

1. Fabrication and erection of structural steel shall be in accordance with the "Code of Standard Practice for Steel Buildings and Bridges" adopted effective March 18, 2005.

2. Materials:

A.	Plates:	ASTM A572 grade 50 u.o.n.
B.	Structural steel tubes:	ASTM A500 grade B (fy = 46 ksi)
C.	Structural steel pipes:	ASTM A53 grade B (fy = 35 ksi)
D.	Channel:	ASTM A572 grade 50
E.	Wide flange:	ASTM A992

3. All bolts are ASTM A325. Pretensioning is not required.

4. Bolt holes in steel shall be $\frac{1}{16}$ inch larger diameter than nominal size of bolt used, unless otherwise noted.

5. For bolted connections, provide $1\frac{1}{2}$ inch edge and end distance, unless otherwise noted.

6. All welds shall be prequalified or qualified by test in conformance with the "Structural Welding Code – Steel" (AWS D1.1–04) of the American Welding Society. Minimum tensile strength of weld metal shall be 70 ksi typical, unless otherwise noted. Welding electrodes shall be as recommended by their manufacturer for the position and other conditions of actual use.

7. Weld symbols shown on the drawings do not necessarily differentiate between shop weld and field welds. When field welds are necessary due to construction procedure or sequence, welds shall be provided and be inspected per specifications. All welds shown as field welds shall be done in the field as indicated.

8. All structural steel, miscellaneous metal and connectors exposed to weather shall be hot–dip galvanized after fabrication. Finish paint shall be in accordance with owner's specification.

9. No penetrations through structural steel columns, beams or girders are allowed except as indicated on the structural drawings.

10. The structural steel fabricator shall furnish shop drawings of all steel for the engineer's review before fabrication.

11. A welding procedure specification (W.P.S.) per A.W.S. D1.1 shall be developed by the fabricator/erector and approved by the engineer of record or his designee. The W.P.S. shall include the welding parameters recommended by the electrode manufacturer.

12. All complete joint penetration groove welds shall be inspected and tested per City of San Francisco requirements.

13. Inspectors are to be S.F. City deputy inspectors and A.W.S. Q.C.I. Certified (a C.W. Inspector), reference A.W.S. D1.1–94, Section 6.1.3.1.

STRUCTURAL INSPECTION, OBSERVATION AND TESTING

1. Special Inspection and Testing are required in Sections 1704, 1707 and 1708 of the CBC. The "Statement of Special Inspections," submitted with the permit application, indicates the specific inspections and tests that are required, as well as the persons or firms responsible for this work.

2. All tests and inspections shall be performed by a certified Special Inspector from an independent testing agency who is employed by the Owner (or agent of the Owner) and not the Contractor.

   A. The Special Inspector shall observe the work assigned for conformance with the approved design drawings and specifications.

   B. The Special Inspector shall furnish inspection reports to the building official, Structural Engineer and other designated persons. All discrepancies shall be brought to the immediate attention of the Contractor for correction, then, if uncorrected, to the proper design authority and to the building official.

   C. The Special Inspector shall submit a final signed report stating whether the work requiring special inspection was, to the best of the inspector's knowledge, in conformance with the approved plans and specifications and applicable standards of quality and workmanship of the CBC.

3. Structural Observation is required by Section 1709 of the CBC. Types of work listed in the following table and indicated as requiring "structural observation" shall be observed during periodic site visits by the Structural Engineer. Contractor is responsible for notifying structural engineer 48 hours before work is ready for observation. These visits do not constitute Special Inspection.

4. The following types of work requiring special inspection and structural observation are included in this project:

Portions of Structure	Types of Work	Work Included in This Project	Structural Observation Required
Structural Steel	Shop Welding	X	
	Field Welding	X	X
	High–strength bolting	X	X

STATEMENT OF SPECIAL INSPECTIONS

The following tests and inspections are required for this project. The tests and inspections indicated here are the responsibilities of the Owner's Special Inspector, as required by Section 1704 of the Building Code.

STRUCTURAL STEEL WELDING: INSPECTION REQUIREMENTS

1. GENERAL: Testing and inspection shall conform to Appendix Q of AISC "Seismic Provisions for Structural Steel Buildings" (AISC 341–05), unless specifically noted otherwise.

2. INSPECTION: The following inspection items are required for all welding:

   A. Confirm that applicable and approved Welding Procedure Specifications (WPS) are available for all welds to be performed.
   B. Confirm that filler metal selection conforms to the requirements of the approved WPS.
   C. Inspection of materials handling and storage
   D. Inspection of profile soundness of finished welds

   In addition, continuous inspection of the following items is required, except for shop welds performed in approved shops per CBC 1704.2.2 and single–pass fillet welds not exceeding $\frac{5}{16}$" weld size:

   E. Inspection of joint fit–up and preparation
   F. Inspection of welding machine settings
   G. Verification of application of preheat
   H. Verification of interpass temperature control
   I. Verification that all applicable requirements of the approved WPS are followed

ABBREVIATIONS

&	And	JST.	Joist
@	At		
A.B.	Anchor bolt	K	Kips
ADD'L	Additional	KSI	Kips per Square Inch
AISC	American Institute of Steel Construction	LBS.	Pounds
ALT.	Alternate	LL	Live Load
ARCH.	Architect	L.L.H.	Long Leg Horizontal
ASD	Allowable Strength Design	L.L.V.	Long Leg Vertical
ASTM	American Society for Testing and Materials	LTWT	Lightweight
A.W.P.A.	American Wood Preservers Assoc.	L.V.L.	Laminated Veneer Lumber
AWS	American Welding Society	MAX.	Maximum
		M.B.	Machine Bolt
		MECH.	Mechanical
		MFR.	Manufacturer
BLKG.	Blocking	M.I.	Malleable Iron
BM.	Beam	MIL.	Millimeter
B.N.	Boundary Nail	MIN.	Minimum
BOCA	Building Officials and Code Administrators International, Inc.	MISC.	Miscellaneous
		(N)	New
BOTT.	Bottom	NO.,#	Number
BRG.	Bearing	N.S.	Near Side
B.S.	Both Sides	N.T.S.	Not to Scale
BTWN.	Between	NWT	Normalweight
CBC	California Building Code	O.C.	On Center
C.C.	Center to Center	O.D.	Outside Diameter
CCR	California Code of Regulations	O.H.	Opposite Hand
		OPNG.	Opening
C.J.	Control Joint	OPP.	Opposite
C.I.P.	Cast–in–place	OSHPD	Office of Statewide Health Planning and Development
C.L.,℄	Center Line		
CLG.	Ceiling		
CLR.	Clear		
CMU	Concrete Masonry Unit	P.A.F.	Powder–Actuated Fasteners
COL.	Column		
CONC.	Concrete	PART.	Partial
CONN.	Connection	PCF	Pounds per Cubic Foot
CONT.	Continuous	PL.,℄	Plate
C.P.	Complete Penetration	PLY.	Plywood
CSK	Countersink	P.P.	Partial Penetration
CTBR.	Counterbore	PSF	Pounds per Square Foot
CTR.	Center	PSI	Pounds per Square Inch
		PWJ	Plywood Web Joists
DBA	Deformed Bar Anchor		
DBL.	Double	RAD.	Radius
DC	Demand Critical (Weld)	R.D.	Roof Drain
DET., DETL.	Detail	REINF.	Reinforcing
DF	Douglas Fir	REQ.	Required
DIA.,ø	Diameter	RF.	Roof
DIAG.	Diagonal	R.O.	Rough Opening
DL	Dead Load	RND.	Round
DN	Down	R.R.	Remove & Replace
DO	Ditto		
DSA	Division of the State Architect	S.A.D.	See Architectural Drawings
DWG(S).	Drawing(s)	SCHED.	Schedule
		SFRS	Seismic Force–Resisting System
(E)	Existing		
EA.	Each	SHT.	Sheet
E.F.	Each Face	SHTG.	Sheathing
E.J.	Expansion Joint	SIM.	Similar
ELEV.,EL.	Elevation	S.M.D.	See Mechanical Drawings
EMB.,EMBED.	Embedment	S.O.G.	Slab on Grade
E.N.	Edge Nail	S.P.	Southern Pine
EQ.	Equal	SSTL.	Stainless Steel
EQUIP.	Equipment	STAGG'D.	Staggered
E.W.	Each Way	STD.	Standard
		STIFF.	Stiffener
FDN.	Foundation	STL.	Steel
F.F.	Finish Floor	STRUCT.	Structural
F.G.	Finish Grade	SYMM.,SYM	Symmetrical
FIN.	Finish		
F.O.C.	Face of Concrete	T&B	Top and Bottom
F.O.M.	Face of Masonry	T&G	Tongue & Groove
F.O.S.	Face of Stud	T.N.	Toe Nail
FRMG.	Framing	T.O.C.	Top of Concrete
F.S.	Far Side	T.O.S.	Top of Steel
FTG.	Footing	T.O.W.	Top of Wall
		TS	Tube Steel
GA.	Gage	TYP.	Typical
GALV.	Galvanized		
G.L.	Grid Line	UBC	Uniform Building Code
GLB	Glue–Laminated Beam	U.O.N.	Unless Otherwise Noted
GR.	Grade		
		VERT.	Vertical
HDG.	Hot–dip Galvanized	V.I.F., ±	Verify in Field
HGR.	Hanger		
HK.	Hook	W/	With
HORIZ.	Horizontal	W/O	Without
H.S.B.	High Strength Bolt	WCLIB	West Coast Lumber Inspection Bureau
HSS	Hollow Structural Sections	W.P.	Working Point
HT.	Height	W.H.S.	Welded Headed Stud
		W.T.S.	Welded Threaded Stud
ICBO	International Council of Building Officials	W.W.F.	Welded Wire Fabric
		WWPA	Western Wood Products Association
ICC	International Code Council		
INT.	Interior		
INV.	Inverted		

GENERAL SYMBOLS AND LEGEND

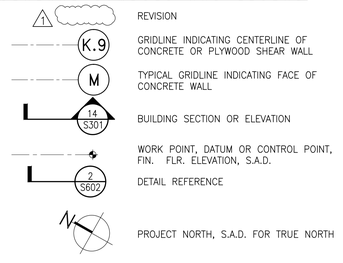

SIMPSON GUMPERTZ & HEGER
Engineering of Structures and Building Enclosures

Simpson Gumpertz & Heger Inc.
The Landmark @ One Market, Suite 600
San Francisco, California 94105
415.495.3700 fax: 415.495.3550
www.sgh.com

Boston
Los Angeles
New York
San Francisco
Washington, DC

Consultant

No.	Date	Description	By
0		ISSUED FOR PERMIT	ROH

Project

TOWER ANTENNA ADDITIONS
SUTRO TOWER
1 LA AVANZADA ST
SAN FRANCISCO
CALIFORNIA
94131

Drawing Title

GENERAL NOTES ABBREVIATIONS & LEGEND

Commission	Checked	Date
067199.06	BW	09/26/11
Drawn	Approved	Scale
GV	ROH	NONE

Seal

REGISTERED PROFESSIONAL ENGINEER
RONALD O. HAMBURGER
No. 2951
STRUCTURAL
STATE OF CALIFORNIA

Drawing No.

S0.1

Ref #	Desciption	Height	Weight	Equipment Type	Emission	ERP (KW)	Customer	Purpose
Replace Existing Equipment								
2	Move KOIT Aux Antenna to Level 5	642	2500	ERI SHPX–6C installed on pole hanging from Level 5	Yes	Need to calc	KOIT–FM	Relocate for better coverage––Also reduces neighborhood RFR
Add New Equipment								
4	KREV Main FM Antenna	762	1000	Antenna Concepts ATI6M on northeast outrigger	Yes	Class A equiv.	KREV FM Radio	Moves main antenna to higher location
5	KREV 950 MHz STL Receive	650	50	Andrew KP4F–820 on east face	no	None	KREV FM Radio	Studio to transmitter relay
6	Second ENG Receive Antenna for KTVU	670	200	NSI Superquad or Eq.––South Leg	No	None	KTVU–TV	Adds southeast news truck coverage
7	Second ENG Receive Antenna for KRON	650	200	NSI Superquad or Eq.––South Leg	No	None	KRON Television	Adds southeast news truck coverage
8	Second ENG Receive Antenna for KPIX	640	200	NSI Superquad or Eq.––South Leg	No	None	KPIX Television	Adds southeast news truck coverage
9	Second ENG Receive Antenna for KGO	630	200	NSI Superquad or Eq.––South Leg	No	None	KGO Television	Adds southeast news truck coverage
10	Second ENG Receive Antenna for KNTV	620	200	NSI Superquad or Eq.––South Leg	No	None	KNTV Television	Adds southeast news truck coverage
11	Second ENG Receive Antenna for KFSF	610	200	NSI Superquad or Eq.––South Leg	No	None	KFSF Television	Adds southeast news truck coverage
12	North Leg Weather Camera Mount	590	40	Canon BU–46H or Eq.––North Leg	No	None	All 6 TV News stations	Adds mounts for weather coverage to North leg
13	South Leg Weather Camera Mount	595	40	Canon BU–46H or Eq.––South Leg	No	None	All 6 TV News stations	Adds mounts for weather coverage to South leg
14	Microwave Dish for KMTP	187	400	Andrew 6 foot UHX6–65––South Leg	No	None	KMTP Television	Adds microwave STL receiver for KMTP
15	Microwave Dish for KCSM	187	400	Andrew 6 foot UHX6–65––South Leg	No	None	KCSM Television	Adds microwave STL receiver for KCSM
16	136–174 MHz Receive	657	32	Bird Technologies BA40–41–DIN	No	None	Level 3 and 4 customers	Technology change––Splits receivers from transmitters on Level 3 and 4
17	330–420 MHz Receive	657	11	Bird Technologies BA40–57–DIN	No	None	Level 3 and 4 customers	Technology change––Splits receivers from transmitters on Level 3 and 4
18	400–520 MHZ Receive	657	18	Bird Technologies BA8080–67–DIN	No	None	Level 3 and 4 customers	Technology change––Splits receivers from transmitters on Level 3 and 4
19	746–806 MHz Receive	657	8	Bird Technologies COL811–806	No	None	Level 3 and 4 customers	Technology change––Splits receivers from transmitters on Level 3 and 4
20	806–860 MHz Receive	657	5	Bird Technologies COL85–870	No	None	Level 3 and 4 customers	Technology change––Splits receivers from transmitters on Level 3 and 4
21	Bay Bridge Receive	187	200	Andrew 6 foot VHP6–180A––East Face	Yes	+26dBm TPO	All 6 TV News stations	Technology change––New bridge camera feed for all stations to share
22	San Mateo Bridge Receive	187	200	Andrew 6 foot VHP6–180A––East Face	Yes	+26dBm TPO	All 6 TV News stations	Technology change––New bridge camera feed for all stations to share
23	Richmond San Rafael Receive	187	200	Andrew 6 foot VHP6–180A––East Face	Yes	+26dBm TPO	All 6 TV News stations	Technology change––New bridge camera feed for all stations to share
24	Dumbarton Bridge Receive	187	200	Andrew 6 foot VHP6–180A––East Face	Yes	+26dBm TPO	All 6 TV News stations	Technology change––New bridge camera feed for all stations to share
25	Carquinis Bridge Receive	657	200	Andrew 6 foot VHP6–180A––East Face	Yes	+26dBm TPO	All 6 TV News stations	Technology change––New bridge camera feed for all stations to share
26	Airport Camera Receive	187	200	Andrew 6 foot VHP6–180A––East Face	Yes	+26dBm TPO	All 6 TV News stations	Technology change––New bridge camera feed for all stations to share
27	Dish Antenna for BAYWEB Project	550	200	Andrew 6 foot VHP6–180A––East Face	Yes	+30 dBm TPO	Bayweb	Technology change. Public safety agency request.
28	Dish Antenna for BAYWEB Project	550	200	Andrew 6 foot VHP6–180A––East Face	Yes	+30 dBm TPO	Bayweb	Technology change. Public safety agency request.
29	Dish Antenna for BAYWEB Project	550	200	Andrew 6 foot VHP6–180A––SW Face	Yes	+30 dBm TPO	Bayweb	Technology change. Public safety agency request.
30	Dish Antenna for BAYWEB Project	550	200	Andrew 6 foot VHP6–180A––SW Face	Yes	+30 dBm TPO	Bayweb	Technology change. Public safety agency request.
31	Dish Antenna for BAYWEB Project	550	200	Andrew 6 foot VHP6–180A––NW Face	Yes	+30 dBm TPO	Bayweb	Technology change. Public safety agency request.
32	Dish Antenna for BAYWEB Project	550	200	Andrew 6 foot VHP6–180A––NW Face	Yes	+30 dBm TPO	Bayweb	Technology change. Public safety agency request.
33	Golden Gate Bridge Receive	187	50	Andrew 30 inch dish East Face	Yes	+23 dBm TPO	All 6 TV News stations	New bridge camera feed for all stations to share
34	WiFi Antenna, East Face	375	50	Ubiquiti Networks M5 MINO Bridge	Yes	+27 dBm TPO	Dept. of Technology, City and County of San Francisco	WiFi for low income San Francisco residents
35	WiFi Antenna	375	50	Ubiquiti Networks M5 MINO Bridge	Yes	+27 dBm TPO	Dept. of Technology, City and County of San Francisco	WiFi for low income San Francisco residents
36	WiFi Antenna	375	50	Ubiquiti Networks M5 MINO Bridge	Yes	+27 dBm TPO	Dept. of Technology, City and County of San Francisco	WiFi for low income San Francisco residents
37	WiFi Antenna	375	50	Ubiquiti Networks M5 MINO Bridge	Yes	+27 dBm TPO	Dept. of Technology, City and County of San Francisco	WiFi for low income San Francisco residents
38	WiFi Antenna	375	50	Ubiquiti Networks M5 MINO Bridge	Yes	+27 dBm TPO	Dept. of Technology, City and County of San Francisco	WiFi for low income San Francisco residents
39	WiFi Antenna, Northwest Face	375	50	Ubiquiti Networks M5 MINO Bridge	Yes	+27 dBm TPO	Dept. of Technology, City and County of San Francisco	WiFi for low income San Francisco residents
40	WiFi Antenna	375	50	Ubiquiti Networks M5 MINO Bridge	Yes	+27 dBm TPO	Dept. of Technology, City and County of San Francisco	WiFi for low income San Francisco residents
41	WiFi Antenna	375	50	Ubiquiti Networks M5 MINO Bridge	Yes	+27 dBm TPO	Dept. of Technology, City and County of San Francisco	WiFi for low income San Francisco residents
42	WiFi Antenna	375	50	Ubiquiti Networks M5 MINO Bridge	Yes	+27 dBm TPO	Dept. of Technology, City and County of San Francisco	WiFi for low income San Francisco residents
43	WiFi Antenna	375	50	Ubiquiti Networks M5 MINO Bridge	Yes	+27 dBm TPO	Dept. of Technology, City and County of San Francisco	WiFi for low income San Francisco residents
44	WiFi Antenna, Southeast Face	375	50	Ubiquiti Networks M5 MINO Bridge	Yes	+27 dBm TPO	Dept. of Technology, City and County of San Francisco	WiFi for low income San Francisco residents
45	WiFi Antenna	375	50	Ubiquiti Networks M5 MINO Bridge	Yes	+27 dBm TPO	Dept. of Technology, City and County of San Francisco	WiFi for low income San Francisco residents
46	WiFi Antenna	375	50	Ubiquiti Networks M5 MINO Bridge	Yes	+27 dBm TPO	Dept. of Technology, City and County of San Francisco	WiFi for low income San Francisco residents
47	WiFi Antenna	375	50	Ubiquiti Networks M5 MINO Bridge	Yes	+27 dBm TPO	Dept. of Technology, City and County of San Francisco	WiFi for low income San Francisco residents
48	WiFi Antenna	375	50	Ubiquiti Networks M5 MINO Bridge	Yes	+27 dBm TPO	Dept. of Technology, City and County of San Francisco	WiFi for low income San Francisco residents
49	FM Trnaslator Antenna, EMF Radio	375	200	Scala CLFM/2 pointed at 42 and 162 degres––Face mounted	yes	.070 H&V	Educational Media Foundation––KLOVE	Translator on 88.9 MHz to improve coverage in San Francisco
50	TV Broadcast Antenna, KTNC, Channel 14	800	2000	Dielectric TFU–24DSC/VP–R 4C190	Yes	1,000	KNTC Televisoin, Concord	Improve Bay Area Coverage
51	TV Broadcast Antenna, KEMO, Channel 32	800	2000	RFS DX24D–FR	Yes	8 KW TPO	KEMO Television, Santa Rosa	Booster to improve San Francisco Coverage
52	TV Broadcast Auxiliary Antenna, KEMO Channel 14	525	1000	Dielectric TFU–10DSC/VP–R 4C190	Yes	250	KTNC Televison, Condord	Improve Bay Area Coverage

ANTA_S100

EQUIPMENT LIST

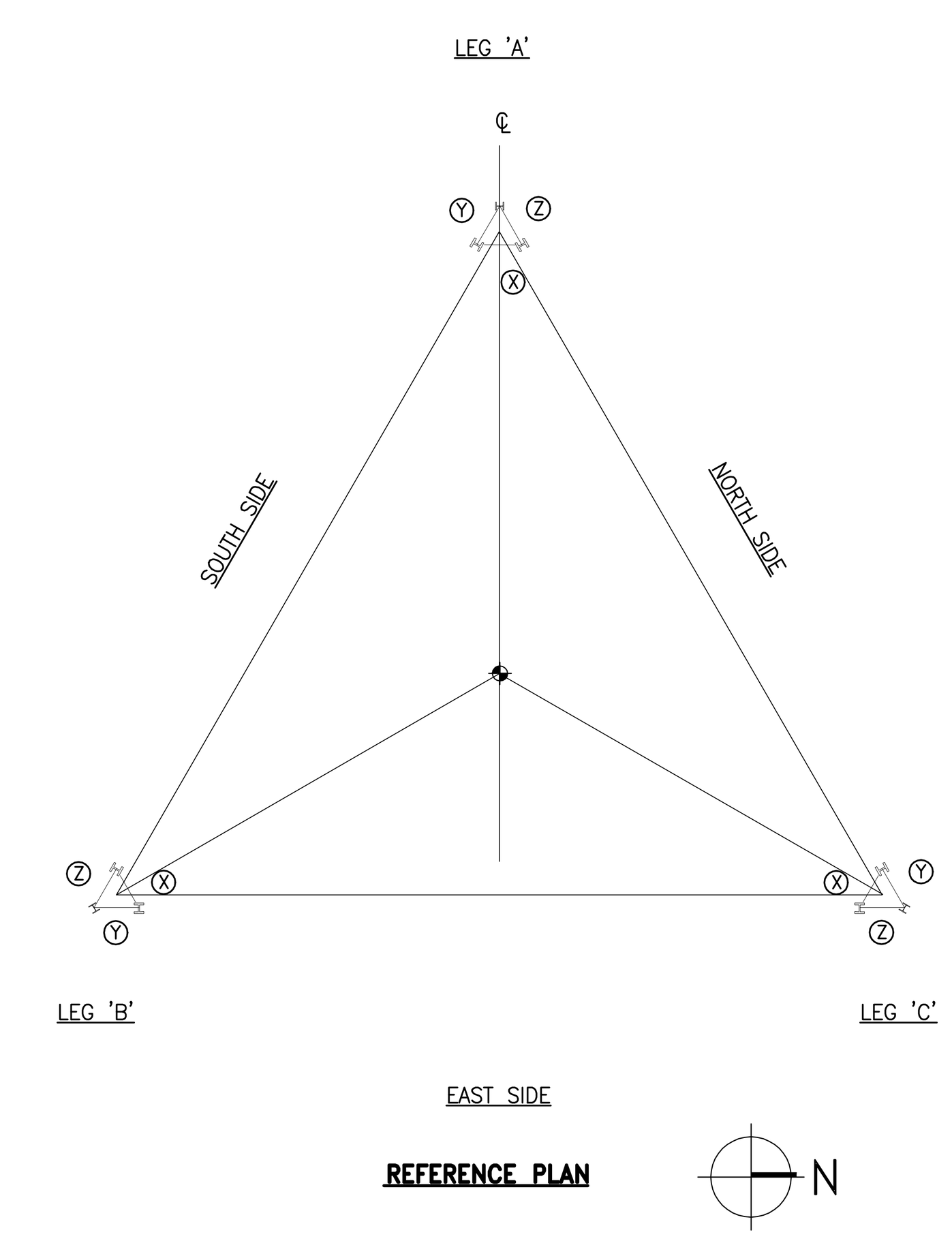

REFERENCE PLAN

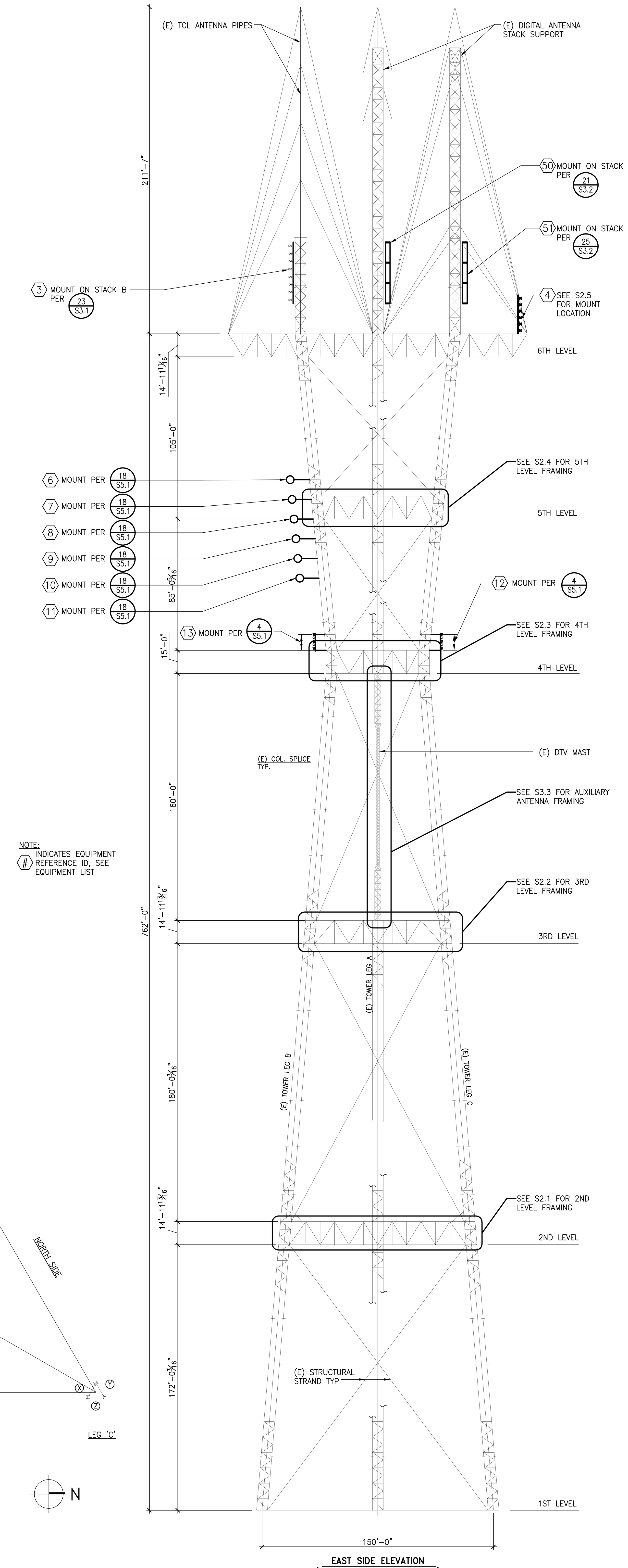

EAST SIDE ELEVATION
(OTHER ELEVATIONS SIMILAR)

TOWER REFERENCE ELEVATION

SIMPSON GUMPERTZ & HEGER
Engineering of Structures and Building Enclosures

Simpson Gumpertz & Heger Inc.
The Landmark @ One Market, Suite 600
San Francisco, California 94105
415.495.3700 fax: 415.495.3550
www.sgh.com

Boston
Los Angeles
New York
San Francisco
Washington, DC

Consultant

No.	Date	Description	By
0		ISSUED FOR PERMIT	ROH

Project

TOWER ANTENNA ADDITIONS SUTRO TOWER
1 LA AVANZADA ST SAN FRANCISCO CALIFORNIA 94131

Drawing Title

TOWER REFERENCE PLAN & ELEVATION

Commission	Checked	Date
067199.06	BW	09/26/11
Drawn	Approved	Scale
GV	ROH	1"=40'–0"

Seal: REGISTERED PROFESSIONAL ENGINEER RONALD O. HAMBURGER No. 2951 STRUCTURAL STATE OF CALIFORNIA

Drawing No.

S1.0

ROTOTILLER® *Axiom™ Series*
Circularly Polarized Broadband FM Antenna

SHPXA Model

Electrical Specifications

Type Number	Number of Bays	Power Gain	dB Gain	Input Type	Feed Configuration	Bay to Bay Spacing
SHPXA-4AC6-HW-SP	4	1.177 @ 88 MHz 1.307 @ 98 MHz 1.395 @ 108 MHz	0.7078 @ 88 MHz 1.1628 @ 98 MHz 1.4457 @ 108 MHz	6 1/8 inch 50 Ohm Female EIA	Center	Half Wave
SHPXA-8AC6-HW-SP	8	2.244 @ 88 MHz 2.519 @ 98 MHz 2.704 @ 108 MHz	3.5102 @ 88 MHz 4.0123 @ 98 MHz 4.3201 @ 108 MHz	6 1/8 inch 50 Ohm Female EIA	Center	Half Wave
SHPXA-12AC6-HW-SP	12	3.314 @ 88 MHz 3.732 @ 98 MHz 4.014 @ 108 MHz	5.2035 @ 88 MHz 5.7194 @ 98 MHz 6.0358 @ 108 MHz	6 1/8 inch 50 Ohm Female EIA	Center	Half Wave
SHPXA-16AC6-HW-SP	16	4.384 @ 88 MHz 4.946 @ 98 MHz 5.325 @ 108 MHz	6.4187 @ 88 MHz 6.9425 @ 98 MHz 7.2632 @ 108 MHz	6 1/8 inch 50 Ohm Female EIA	Center	Half Wave

Mechanical Specifications

Type Number	Antenna Only				Antenna with Radomes				Antenna with ½-inch radial ice				Antenna with Radomes and ½-inch radial ice			
	Weight		CaAc		Weight		CaAc		Weight		CaAc		Weight		CaAc	
	lbm	kg	ft²	m²	lbm	kg	ft²	m²	lbm	kg	ft²	m²	lbm	kg	ft²	m²
SHPXA-4AC6-HW-SP	495	224.5	28.3	2.6	695	315.3	45.7	4.2	830	376.5	36.3	3.4	1330	603.3	54	5.0
SHPXA-8AC6-HW-SP	990	449.1	56.7	5.3	1390.0	630.5	91.3	8.5	1660.0	753.0	72.7	6.8	2660.0	1206.6	108.0	10.0
SHPXA-12AC6-HW-SP	1485	673.6	85.0	7.9	2085	945.8	137.0	12.7	2490	1129.5	109.0	10.1	3990	1809.9	162	15.0
SHPXA-16AC6-HW-SP	1980	898.1	113.3	10.5	2780.0	1261.0	182.7	17.0	3320.0	1506.0	145.3	13.5	5320.0	2413.2	216.0	20.1

Ordering Information

Type Number Definition

SHPXA - a b c d - HW - SP	
a	Number of Bays
b	Interbay Line Size: A = 3 1/8 inch, B = 4 1/8 inch, C = 6 1/8 inch
c	Input Feed Configuration: E = End Fed, C = Center fed for even number of bays, off center fed for odd number of bays
d	RF Input Size: Blank = 3 1/8 inch, 6 = 6 1/8 inch
Example:	SHPXA-12AC6-HW-SP
Description:	ERI Axiom™ Series ROTOTILLER FM Antenna, twelve bay, 3 1/8 inch interbay line with 6 1/8 inch RF input, center fed, half wave length bay to bay spacing.

Options*

- Anti-rotation brackets
- Beam tilt (center fed antennas only)
- First null fill (center fed antennas only)
- Second null fill (center fed antennas only).
- Beam tilt and first null fill (center fed antennas only)
- Radomes
- Deicers (600w/220v)
- Stem heaters (300w/220v)
- Export packing

* Options available at additional cost.

ELECTRONICS RESEARCH, INC. ERI
Your Single Source for Broadcast Solutions™ ■ www.eriinc.com ■ 877 ERI-LINE

Copyright © 2009 Electronics Research, Inc. All rights reserved.
Printed in USA (No. 20090317001_AEN01)

ROTOTILLER® *Axiom™ Series*
Circularly Polarized Broadband FM Antenna

Typical Mounting Configuration

Diagram shows Model SHPXA, 8 Bay configuration.

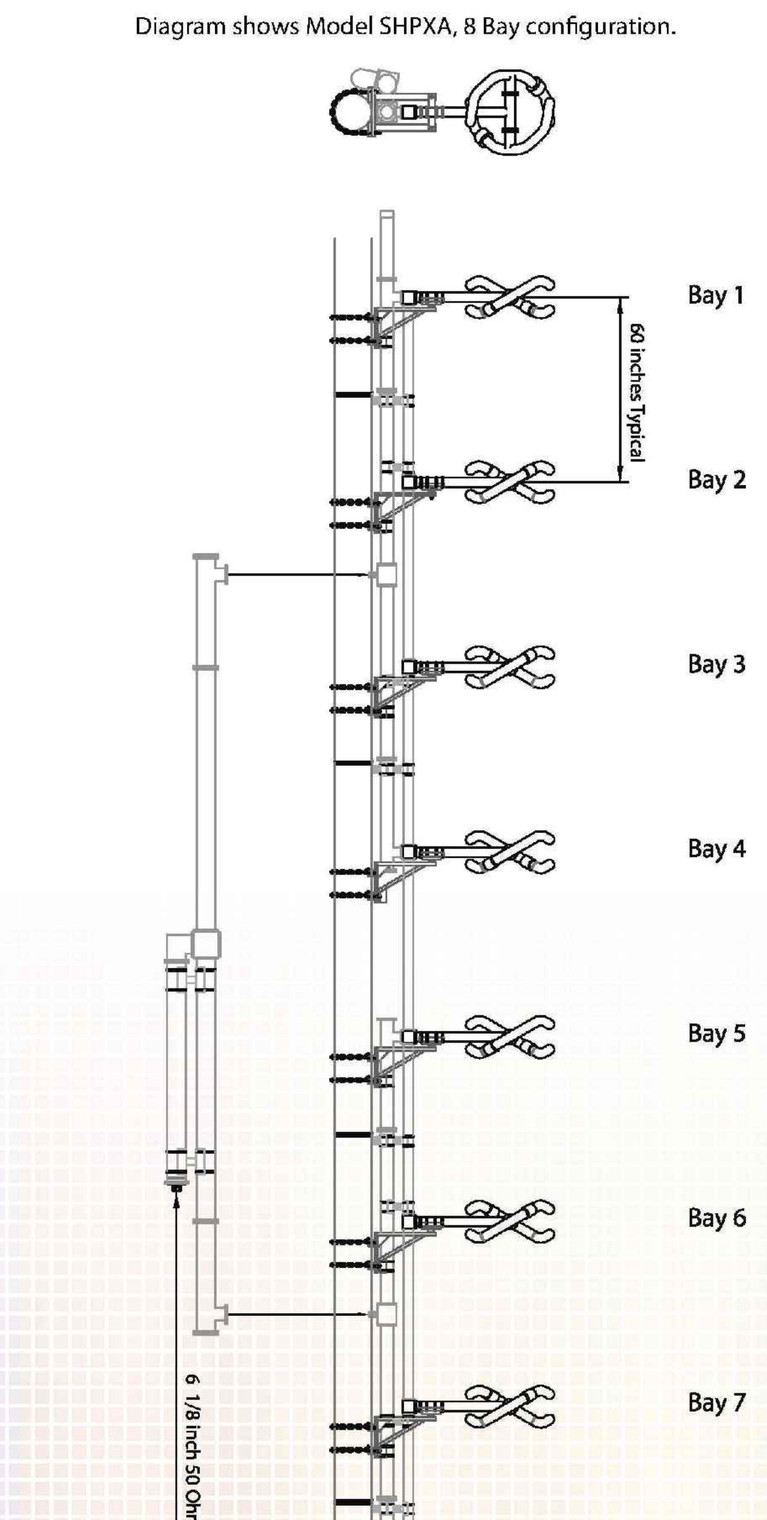

ELECTRONICS RESEARCH, INC. ERI
Your Single Source for Broadcast Solutions™ ■ www.eriinc.com ■ 877 ERI-LINE

Copyright © 2009 Electronics Research, Inc. All rights reserved.
Printed in USA (No. 20090317001_AEN01)

ANTA_S101_S102_S103_S104_S105

1 ANTENNA REF #2 AND #3

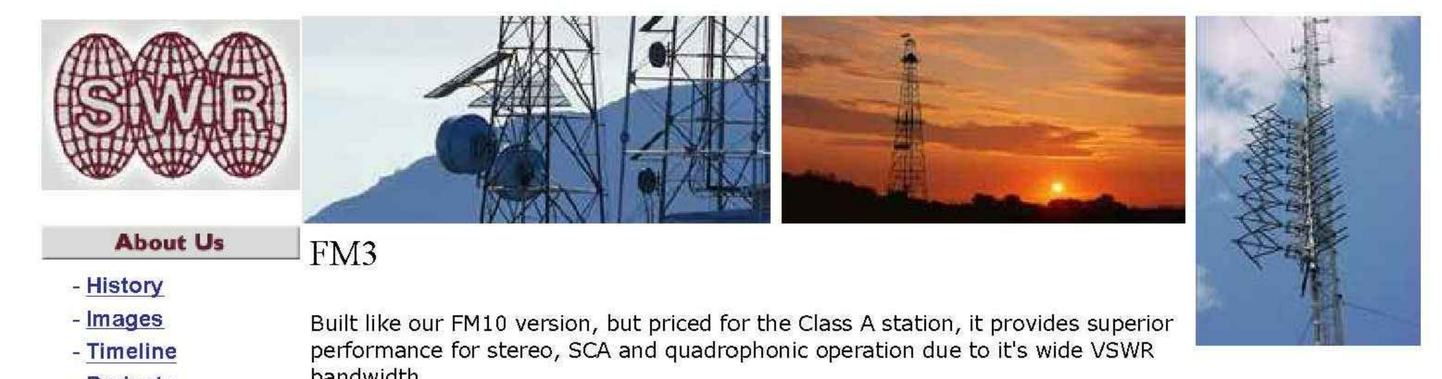

About Us
- History
- Images
- Timeline
- Projects

Products
- Illumitron
- Illumitron HD
- FM Antennas
- FM1 Antennas
- UHF Antennas
- VHF Antennas

Online Catalog

Engineering
- Engineering Info
- FAQ
- Questionnaire
- Downloads
- Help Formulae
- Field Service

Contact Us

Home

FM3

Built like our FM10 version, but priced for the Class A station, it provides superior performance for stereo, SCA and quadrophonic operation due to it's wide VSWR bandwidth.

FREQUENCY RANGE................88-108 MHz.
POLARIZATION....................Circular
POWER RATING....................3 Kw per bay
INPUT.................................1-5/8 EIA
CIRCULARITY.......................+/- 2 dB
VSWR..................................1.1:1 +/- 200 KHz

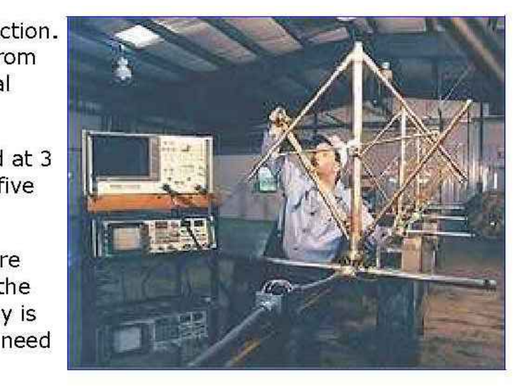

Durable corrosion resistant construction. The antenna system is fabricated from rugged heavy wall copper and naval brass. All joints are TIG welded.

Full power rating. Each bay is rated at 3 Kw, with a maximum of 15 Kw for five bays or more.

Pressurized and grounded, the entire antenna system is presssurized to the feed point of each bay and each bay is DC grounded, thus eliminating the need to purchase a shorting stub.

Beam tilt and/or null fill optional. Custom vertical patterns are available with center fed arrays that have an even number of bays.

Custom directional antenna patterns. Directional patterns based on the customer's mounting structure are available to meet FCC requirements.

Electrical deicers for heavy icing conditions are available.

A 2 year limited warranty on defects in material and workmanship to the original purchaser.

Employment
Map
Help

- Governor's Excellence Award
- 1999 NAB Booth Exhibits
- International Language Translations

We accept: Visa, Mastercard and American Express.

FM3 DATA

Model	Bays	Full Wave Power gain	F/W dB gain	1/2-Wave Power gain	1/2-wave dB gain	Power Rating	Full-wave Antenna Aperture
FM3/1	1	0.48	-3.37	0.38	-4.2	3 Kw	2.5 Ft.
FM3/2	2	1	0	0.76	-1.19	6 Kw	10 Ft.
FM3/3	3	1.5	1.76	1.14	0.57	9 Kw	20 Ft.
FM3/4	4	2.1	3.22	1.52	1.82	12 Kw	30 Ft.
FM3/5	5	2.7	4.31	1.9	2.79	15 Kw	40 Ft.
FM3/6	6	3.2	5.05	2.28	3.58	15 Kw	50 Ft.
FM3/7	7	3.8	5.8	2.66	4.25	15 Kw	60 Ft.
FM3/8	8	4.3	6.33	3.04	4.83	15 Kw	70 Ft.
FM3/10	10	5.6	7.48	3.8	5.8	15 Kw	90 Ft.
FM3/12	12	6.7	8.26	4.56	6.59	15 Kw	110 Ft.

Model	1/2-wave Antenna Aperture	Full-Wave weight (Lbs)	F/W Weight w/deicers (Lbs)	F/W weight w/radomes (Lbs)	1/2-Wave Weight (Lbs)	1/2- Wave Weight w/deicers (Lbs)	1/2- Wave Weight w/radomes (Lbs)
FM3/1	2.5 Ft.	21	30	52	21	30	52
FM3/2	5 Ft.	100	118	162	94	112	156
FM3/3	10 Ft.	155	182	248	143	170	236
FM3/4	15 Ft.	210	246	334	192	228	316
FM3/5	20 Ft.	265	310	420	241	286	396
FM3/6	25 Ft.	320	374	506	290	344	476
FM3/7	30 Ft.	410	473	627	374	437	591
FM3/8	35 Ft.	475	547	723	433	506	681
FM3/10	45 Ft.	600	690	910	546	636	856
FM3/12	55 Ft.	710	818	1082	644	752	1016

Model	F/W windload 50/33 psf	F/W windload w/deicers (Lbs)	F/W windload w/radomes (Lbs)	1/2- wave windload 50/33 psf	1/2- wave windload w/deicers (Lbs)	1/2- wave windload w/radomes (Lbs)
FM3/1	45	48	268	45	48	268
FM3/2	165	168	583	157	158	559
FM3/3	260	266	877	225	231	830
FM3/4	350	360	1171	294	303	1101
FM3/5	440	453	1465	363	375	1371
FM3/6	570	586	1759	432	447	1642
FM3/7	665	684	2053	500	519	1912
FM3/8	760	782	2347	569	591	2183
FM3/10	980	1009	2935	707	735	2724
FM3/12	1165	1200	3623	844	879	3265

All educational series antennas come with a limited 2 year warranty on defects in material and workmanship to the original purchaser.

Antennas with 3 bays or more require a power divider with 7/8" EIA input.

All FME series antennas are designed for mounting on a pipe or pole with a diameter of up to 4.0 inches.

For areas where there is heavy icing, electrical deicers are available.

SWR Inc. maintains a continuous program of product improvement, and therefore reserves the right to change specifications without notice.

Back to FM Antennas

Systems With Reliability, Inc.
619 Industrial Park Road
Ebensburg, PA 15931 USA
toll free: 800-762-7743
tel: 814-472-5436
fax: 814-472-5552

ANTA_S101_S102_S103_S104_S105

8 ANTENNA REF #4

Terrestrial Microwave Antenna System Products

820 - 960 MHz
Antenna Inputs. All antenna VSWR values are specified with 7/8" EIA connectors. Other optional inputs may result in equal or slightly higher VSWR. Contact Andrew for details.

Type Number	Diameter ft (m)	RPE Number(s)	Regulatory Compliance 101	U.S. FCC 74	U.S. FCC 78	ETSI Class	ETSI Gain	Gain, dBi Low	Gain, dBi Mid-Band	Gain, dBi Top	Beamwidth Horizontal	Beamwidth Vertical	Cross Pol. Disc., dB	F/B Ratio dB	VSWR max. (R.L., dB)
KP	**GRIDPAK® Antennas** – Unpressurized Single Polarized **Antenna Inputs:** 7/8" EIA, "F" Flange Female, Type N Female, and 7-16 DIN Female														
KP4F-820	4 (1.2)	3733	–	–	–	–	–	17.5	18.2	18.8	17.2	15.9	28	24	1.4 (15.5)
KP6F-820	6 (2.0)	2994	B	–	–	–	–	21.8	22.6	23.2	10.8	9.5	30	28	1.4 (15.5)
KP8F-820	8 (2.4)	3613	A	–	–	–	–	23.4	24.1	24.7	9.0	8.0	34	25	1.35 (16.5)
KP10F-820	10 (3.0)	2996	A	–	–	–	–	25.2	25.9	26.5	8.0	6.7	30	25	1.35 (16.5)
KP13F-820	13 (4.0)	2998	A	–	–	–	–	27.3	28.0	28.6	5.8	4.9	36	30	1.35 (16.5)
MKP	**Mini-GRIDPAK Antennas** – Unpressurized Single Polarized **Antenna Inputs:** 7/8" EIA, "F" Flange Female, Type N Female, and 7-16 DIN Female														
MKP-820	6.6 x 3.3 (2 x 1)	3470	–	–	–	–	–	18.0	18.2	18.5	20.0	10.0	20	15	1.5 (14.0)

890 - 960 MHz
Antenna Inputs. All antenna VSWR values are specified with 7/8" EIA connectors. Other optional inputs may result in equal or slightly higher VSWR. Contact Andrew for details.
Pressurization. Feeds are pressurizable to 10 lb/in² (70 kPa).

Type Number	Diameter ft (m)	RPE Number(s)	Regulatory Compliance 101	U.S. FCC 74	U.S. FCC 78	ETSI Class	ETSI Gain	Gain, dBi Low	Gain, dBi Mid-Band	Gain, dBi Top	Beamwidth Horizontal	Beamwidth Vertical	Cross Pol. Disc., dB	F/B Ratio dB	VSWR max. (R.L., dB)
P	**Standard Antennas** – Unpressurized Single Polarized **Antenna Inputs:** 7/8" EIA, "F" Flange Female, Type N Female, and 7-16 DIN Female														
P4F-9	4 (1.2)	2311	B	–	–	–	–	18.1	18.4	18.7	19.5	19.5	8	21	1.3 (17.7)
P6F-9	6 (1.8)	2302	A	–	–	–	–	21.5	21.9	22.2	13.0	13.0	12	24	1.3 (17.7)
P8F-9	8 (2.4)	2306	A	–	–	–	–	24.0	24.3	24.7	9.2	9.2	15	27	1.3 (17.7)
P10F-9	10 (3.0)	2308	A	–	–	–	–	26.0	26.3	26.6	7.8	7.8	15	29	1.3 (17.7)
P12F-9	12 (3.7)	2319	A	–	–	–	–	27.7	28.0	28.3	6.7	6.7	15	30	1.3 (17.7)
P15F-9	15 (4.6)	2321	A	–	–	–	–	29.6	29.9	30.2	5.3	5.3	16	32	1.3 (17.7)

ANDREW. Customer Service Center - Call toll-free from: • U.S.A., Canada and Mexico 1-800-255-1479

Terrestrial Microwave Antenna System Products

3 and 4 ft GRIDPAK® Antennas

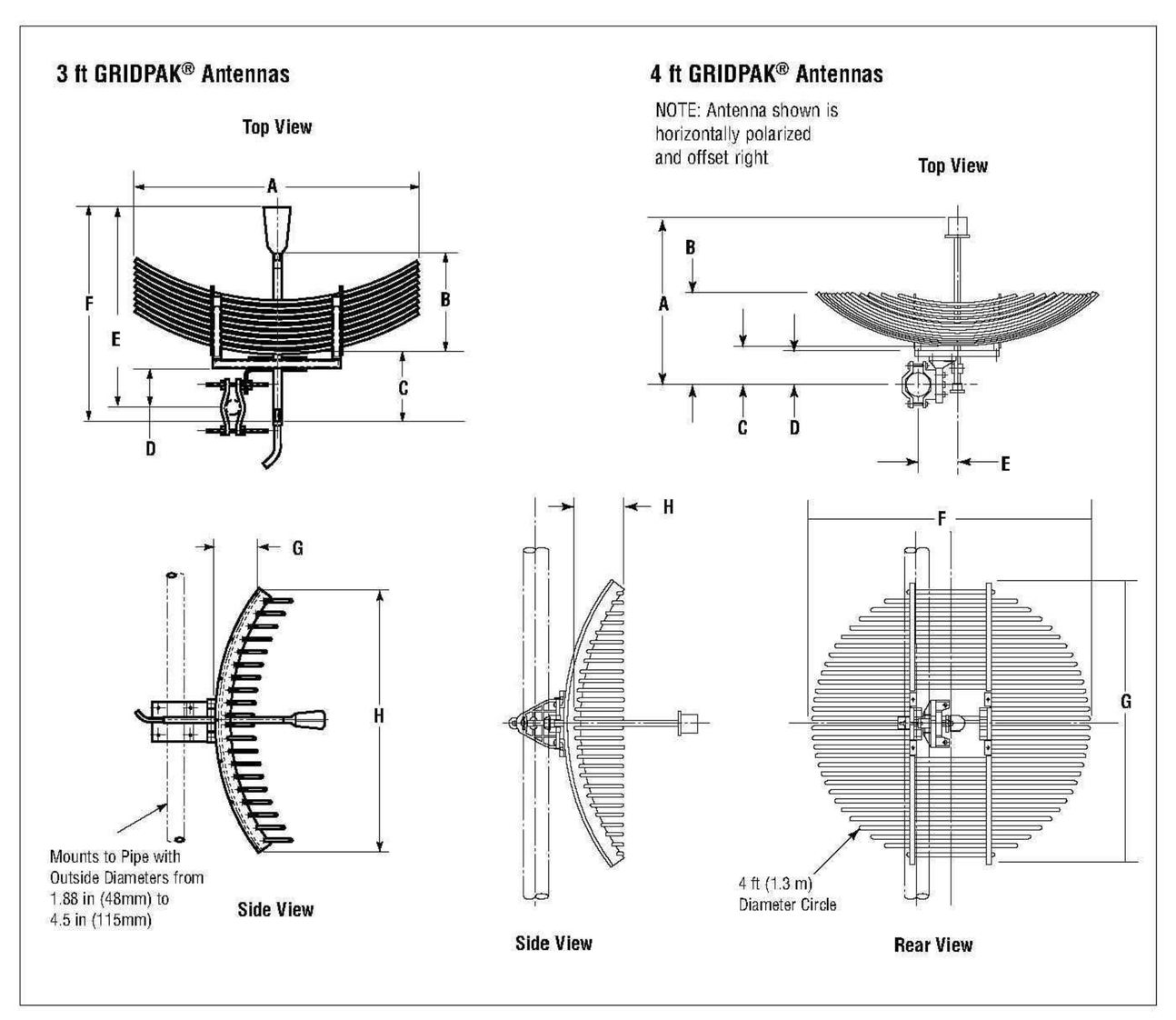

Dimensions in Inches (mm)

Antenna Size, ft (m)	A	B	C	D	E	F	G	H
3 (1.0)	32.3 (950)	10.9 (278)	8.1 (205)	3.6 (92)	20.5 (520)	23.1 (587)	65 (165)	37.8 (959)
4 (1.2)	29.9(772)	16.4 (416)	7.3 (185)	5.7 (146)	6.9 (175)	48.5 (1231)	51.5 (1309)	8.3 (232)

ANDREW. Customer Service Center - Call toll-free from: • U.S.A., Canada and Mexico 1-800-255-1479

ANTA_S101_S102_S103_S104_S105

3 ANTENNA REF #5

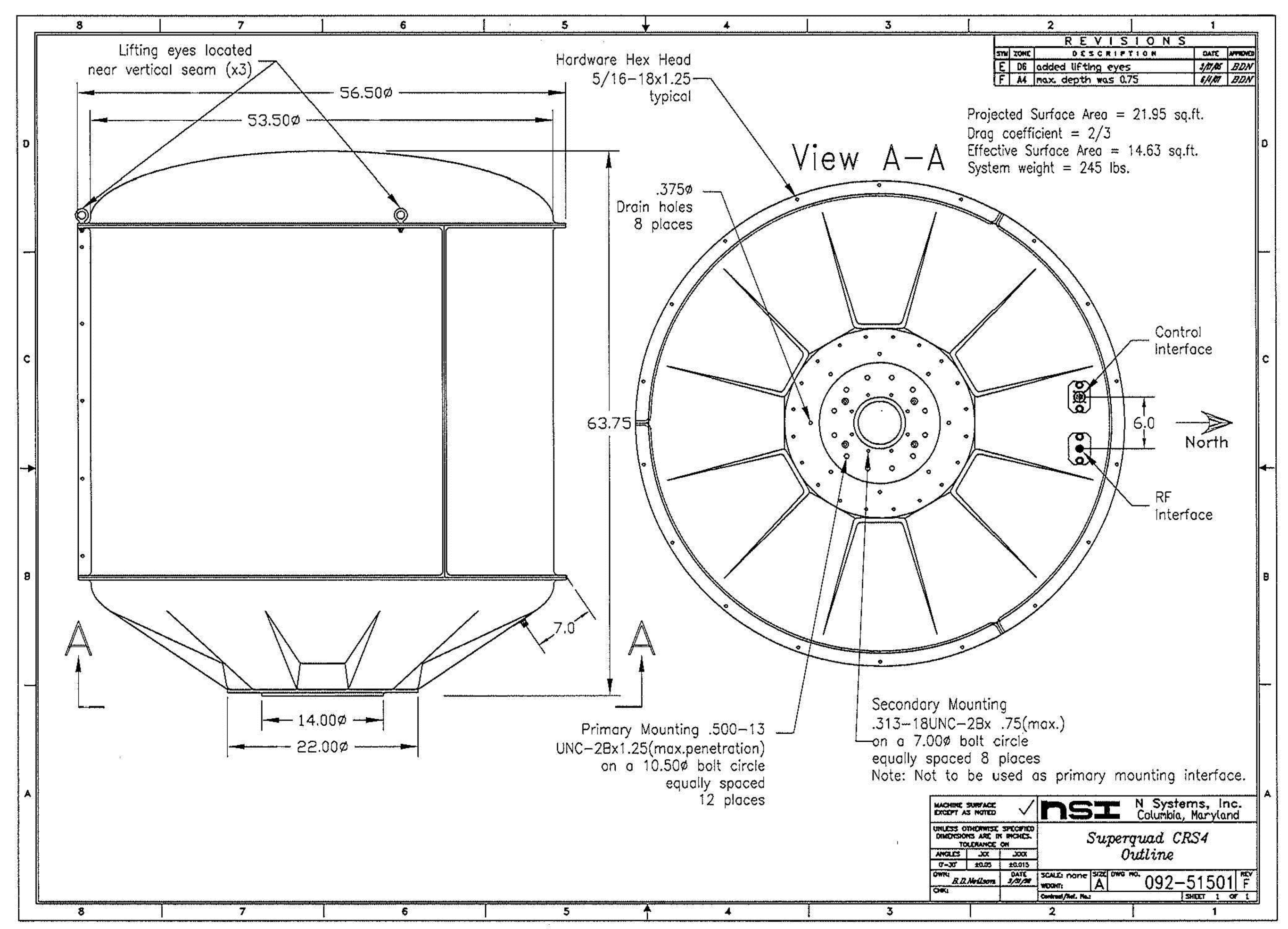

ANTA_S101_S102_S103_S104_S105

4 ANTENNA REF #6 TO #11

SIMPSON GUMPERTZ & HEGER
Engineering of Structures and Building Enclosures
Simpson Gumpertz & Heger Inc.
The Landmark @ One Market, Suite 600
San Francisco, California 94105
415.495.3700 fax: 415.495.3550
www.sgh.com
Boston
Los Angeles
New York
San Francisco
Washington, DC

Consultant

No.	Date	Description	By
0		ISSUED FOR PERMIT	ROH

Project
TOWER ANTENNA ADDITIONS
SUTRO TOWER
1 LA AVANZADA ST
SAN FRANCISCO
CALIFORNIA
94131

Drawing Title
ANTENNA CUT SHEETS

Commission	Checked	Date
067199.06	BW	09/26/11
Drawn	Approved	Scale
GV	ROH	AS NOTED

Seal: REGISTERED PROFESSIONAL ENGINEER RONALD O. HAMBURGER No. 2951 STRUCTURAL STATE OF CALIFORNIA

Drawing No.
S1.1

SPECIFICATIONS

Pan-Tilt Section

Elevation Control	Orbital	Yoke
Elevation Angle	Pan/Tilt: 360° / Tilt w/ +45° / -10°	Pan/Tilt: 360° / Tilt w/ +90° / -90°
Azimuth Control	Pan/Tilt: 0.05 - 30°/s, Tilt/Iris/Focus: 0.05 - 15°/s	Pan/Tilt: 0.05 - 30°/s, Tilt/Iris/Focus: 0.05 - 15°/s
Repeatability	Pan/Tilt: ± 0.1°	Pan/Tilt: ± 0.1°
Connector Receptacle	DC: Hirose 12-pin(HR25-10TJ-12S) (or) RS-485: Hirose 6-pin(HR25-10TJ-6S)	AC: Male, Cooper(3PC-2101), ACR out (Includes position information)
Cable	Composite (RS-485, DC power, Video)	AUX-RS, VD analog composite, SD composite
Home Limit Switch	Hall Effect Sensor	Hall Effect Sensor
Cable	DC: Low Impedance twisted(0.75 mm² min)	BNC: 1 line (5 cable/RG-59)
Cable Length	Pan/Tilt: 10 m (32.8 ft)	Pan/Tilt: 10 m (32.8 ft) (Extended to 250 m)
Camera Interface	Analog: 1 ch	Analog: 1 ch, IP: 1 ch
Resolution	Pan/Tilt: 0.1°	Pan/Tilt: 0.1°
Preset Speed (Camera/Lens)	Pan/Tilt: 360°/s (Varies time combination)	Pan/Tilt: 360°/s (Varies time combination)
Weight	Net: Lightest section	Net: 4.5 kg (9.9 lbs) (Varies time combination)
Wind Speed Tolerance	Operating: 100 km/h (62 mph)	Operating: 100 km/h (62 mph), Survival: 200 km/h (124 mph)
Wind Speed (Camera/Lens)	Alarm: 1 ch	Alarm: 1 ch
Wiper	Built-in Wiper	Built-in Wiper
Finish	Powder Coat, Textured Section by Third Party Wighter Land	Powder Coat, Textured
Ingress Protection	IP66	IP66
Wind Vane-to-Resistance	0 - 30km/h Normal operation 30 - 40km/h Limited operation 40 - 60m/s Max. destruction	0 - 30km/h Normal operation 30 - 40km/h Limited operation 40 - 60m/s Max. destruction

Camera & Lens Section

Model	1/3" HD SDI/3G, total of approx. 2.07mega pixels are (HD)	
Range of Zoom	4.5° (Wide)(W) - 180mm (Tele)(T) (f = 3.6 (W)-216 (T) (approximate), 8.2X - 110(mm), 16.5 (W)mm w/ Ext)	
Zoom Ratio	30x Optical zoom (3x digital extender)	
Digital Zoom	12x (Max.)	
Focus	AUTO, Manual	
Frame rate and Shutter speed	59.94i (1/ 2 / 30 (1/ 4)P 50i (1/ 2 / 25 (1/ 4)P	Prime Tele: 59i - Shutter Speed (1 / 1.75 / 120, 1/100, 1/1000) Prime Tele: 50i - Shutter Speed (1 / 1.75 / 120, 1/100, 1/1000)
Gain	Auto, Low, Mid, High, Fixed, Manual	Auto, Low, Mid, High, Fixed, 46dB
White balance	AUTO, ATW	
Other Functions	Digital Zoom, Digital Zoom and Expo, Digital Zoom and Expo, Digital Zoom and Expo

Bird Technologies Group - Item # BA8080-67-DIN, 400-520 MHz, UHF Omnidirectiona... Page 1 of 2

Bird Technologies Group
30303 Aurora Rd.
Solon, Ohio 44139
Phone: 440-248-1200
FAX: (440) 248-5426
Email: sales@bird-technologies.com
Website: www.bird-technologies.com

All Categories > Antennas > 400-520 MHz Antennas > Item # BA8080-67-DIN

Item # BA8080-67-DIN, 400-520 MHz, UHF Omnidirectional Exposed Dipole Antenna, 2x3 dBd


larger image

400-520 MHz, UHF Omnidirectional Exposed Dipole Antenna, 2x3 dBd

UHF Omnidirectional Dipole Arrays
BA8080-67-DIN = 2x8 dipoles (4 bays), Turnstile stacked, Dual section support.

These high performance UHF dipole arrays are ideal for highly populated radio sites requiring long haul omnidirectional coverage. They operate over entire bands and offer gain of 2, 6 or 9dBd (depending on model), exhibiting a VSWR of <1.5:1 across the band. The arrays utilize an internal phasing harness in PTFE based double-shielded coaxial cable with polyethylene jacket to aid waterproofing and resist scratch or puncture damage. The use of a unique phasing arrangement provides extensive side lobe suppression and null fill characteristics. UHF arrays will accept an input power level of 500 watts continuous.

For more information about RFI Antennas Click here

Specifications

PIM Rated	Yes
Gain (dB)	2x6
Frequency Band (MHz)	400-520
Bandwidth (MHz)	120
VSWR (Return Loss)	<1.5 :1
Impedance (Ω)	50
Downtilt	Not offered
Vertical Beamwidth	2x16°

http://birdtechnologies.thomasnet.com/printitem/antennas/400-520-mhz-antennas/ba8080-... 8/18/2011

Bird Technologies Group - Item # BA8080-67-DIN, 400-520 MHz, UHF Omnidirectiona... Page 2 of 2

Horizontal Beamwidth	Omni +/-0.5dB
Input Power (Watts)	500
Passive IM 3rd order (2x20W) dBc	<-140
Construction & Configuration	2x8 dipoles (4 bays), Turnstile stacked, Dual section support
Length (inches)	197
Weight	44
Shipping Weight (lbs)	124
Shipping Dimensions (inches) [H x W x L]	17 x 22 x 126
Termination	7/16" DIN female with 20" 9142 cable tail
Mounting Area	20" x 2.5" diam. aluminum
Suggested Clamps	-
Projected Area (ft²)	No Ice - 6.5, With Ice - 10.9
Lateral Thrust @ 100 mph lbs.	161
Wind Gust Rating mph	No Ice - 134, With Ice - 104
Torque@ 100 mph ft-lbs.	1045
RoHS Compliant	Yes

Print Back

http://birdtechnologies.thomasnet.com/printitem/antennas/400-520-mhz-antennas/ba8080-... 8/18/2011

Bird Technologies Group - Item # COL811-806, 746-806 MHz, Meander Collinear Anten... Page 1 of 2

Bird Technologies Group
30303 Aurora Rd.
Solon, Ohio 44139
Phone: 440-248-1200
FAX: (440) 248-5426
Email: sales@bird-technologies.com
Website: www.bird-technologies.com

All Categories > Antennas > 330-490 MHz Antennas > 746-960 MHz Antennas > Item # COL811-806

Item # COL811-806, 746-806 MHz, Meander Collinear Antenna, 7 dBd

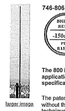
larger image

746-806 MHz, Meander Collinear Antenna, 7 dBd

The 800 MHz Range of Meander Collinear Antennas have been specifically designed for applications requiring high performance, strong bandwidth and exceptional PIM specifications.

The patented **Meander Collinear** element design allows multiple half wave elements to be stacked without the variations in cable lengths and mechanical joints which have typified the construction techniques in high gain collinear antennas. With each dipole element being printed on a single sided PCB the susceptibility to passive intermodulation is practically eliminated. Placing the elements on a substrate not only controls PIM but also removes manufacturing variations so that each and every antenna will provide the same pattern, tilt and VSWR characteristics over it's operating bandwidth. Consistency is guaranteed and a cost effective, reliable, high performance, low PIM antenna results.

The radome and mounting tube support this high performance antenna in a truly rugged package. Everything about these Meander Collinears reflects the new demand for unquestioned performance electrically and physically in the most demanding public safety and industrial applications,where nothing can be left to chance.

The antenna has set frequency bands with the common bands generally available in stock.

- Strong Bandwidth
- Internally DC grounded for lightning protection and reduction of precipitation noise
- Tightly controlled radiation patterns for optimum coverage
- Patented PCB design for optimum RF pattern stability
- Full band coverage
- **Industry leading PIM ratings (-150dBc) providing low IM and low noise characteristics for optimum performance**

For more information about RFI Antennas Click here

http://birdtechnologies.thomasnet.com/printitem/antennas/746-960-mhz-antennas/col811-8... 8/17/2011

Bird Technologies Group - Item # COL811-806, 746-806 MHz, Meander Collinear Anten... Page 2 of 2

Specifications

PIM Rated	Yes
Frequency Band (MHz)	746-806
Gain (dB)	9
Bandwidth (MHz)	Full
VSWR (Return Loss)	<1.5:1 (14dB)
Impedance (Ω)	50
Vertical Beamwidth	6.4°
Horizontal Beamwidth	Omni +/- 1dB
Input Power (Watts)	250
Passive IM 3rd order (2x20W) dBc	<-150
Construction & Configuration	Composite fiberglass sky blue radome, aluminum mounting tube
Length (inches)	142.1
Radome Diameter (inches)	1.5
Weight (lbs.)	7.3
Shipping Weight (lbs)	11.7
Shipping Dimensions (inches) [H x W x L]	2.6 x 2.6 x 148.6
Termination	Fixed 7/16" DIN
Mounting Area	20" x 2" diam. aluminum
Suggested Clamps	91-00-104 (not included)
Projected Area (ft²)	No Ice - 1.75 With Ice - 2.92
Lateral Thrust @ 100 mph lbs.	No Ice - 43 With Ice - 72
Wind Gust Rating mph	No Ice - >150 With Ice - >150
Torque@ 100 mph ft-lbs.	No Ice - 193 With Ice - 321

Print Back

http://birdtechnologies.thomasnet.com/printitem/antennas/746-960-mhz-antennas/col811-8... 8/17/2011

ANTA_1101_1102_1103_1104_1105

1 ANTENNA REF #18

ANTA_1101_1102_1103_1104_1105

2 ANTENNA REF #19

Bird Technologies Group - Item # COL85-870, 806-870 MHz, Meander Collinear Antenn... Page 1 of 2

Bird Technologies Group
30303 Aurora Rd.
Solon, Ohio 44139
Phone: 440-248-1200
FAX: (440) 248-5426
Email: sales@bird-technologies.com
Website: www.bird-technologies.com

All Categories > Antennas > 400-520 MHz Antennas > 746-960 MHz Antennas > Item # COL85-870

Item # COL85-870, 806-870 MHz, Meander Collinear Antenna, 7 dBd

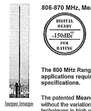
larger image

806-870 MHz, Meander Collinear Antenna, 7 dBd

The 800 MHz Range of Meander Collinear Antennas have been specifically designed for applications requiring high performance, strong bandwidth and exceptional PIM specifications.

The patented **Meander Collinear** element design allows multiple half wave elements to be stacked without the variations in cable lengths and mechanical joints which have typified the construction techniques in high gain collinear antennas. With each dipole element being printed on a single sided PCB the susceptibility to passive intermodulation is practically eliminated. Placing the elements on a substrate not only controls PIM but also removes manufacturing variations so that each and every antenna will provide the same pattern, tilt and VSWR characteristics over it's operating bandwidth. Consistency is guaranteed and a cost effective, reliable, high performance, low PIM antenna results.

The radome and mounting tube support this high performance antenna in a truly rugged package. Everything about these Meander Collinears reflects the new demand for unquestioned performance electrically and physically in the most demanding public safety and industrial applications,where nothing can be left to chance.

The antenna has set frequency bands with the common bands generally available in stock.

- Strong Bandwidth
- Internally DC grounded for lightning protection and reduction of precipitation noise
- Tightly controlled radiation patterns for optimum coverage
- Patented PCB design for optimum RF pattern stability
- Full band coverage
- **Industry leading PIM ratings (-150dBc) providing low IM and low noise characteristics for optimum performance**

For more information about RFI Antennas Click here

http://birdtechnologies.thomasnet.com/printitem/antennas/746-960-mhz-antennas/col85-87... 8/18/2011

Bird Technologies Group - Item # COL85-870, 806-870 MHz, Meander Collinear Antenn... Page 2 of 2

Specifications

PIM Rated	Yes
Frequency Band (MHz)	806-870
Gain (dB)	7
Bandwidth (MHz)	Full
VSWR (Return Loss)	<1.5:1 (14dB)
Impedance (Ω)	50
Vertical Beamwidth	12°
Horizontal Beamwidth	Omni +/- 1dB
Input Power (Watts)	250
Passive IM 3rd order (2x20W) dBc	<-150
Construction & Configuration	Composite fiberglass sky blue radome, aluminum mounting tube
Length (inches)	72
Radome Diameter (inches)	1.5
Weight (lbs.)	4.6
Shipping Weight (lbs)	9.0
Shipping Dimensions (inches) [H x W x L]	2.6 x 2.6 x 79
Termination	Fixed 7/16" DIN
Mounting Area	20" x 2" diam. aluminum
Suggested Clamps	91-00-104 (not included)
Projected Area (ft²)	No ice - 0.84 With Ice - 1.30
Lateral Thrust @ 100 mph lbs.	No Ice - 21 With Ice - 32
Wind Gust Rating mph	No Ice - >150 With Ice - >150
Torque@ 100 mph ft-lbs.	No Ice - 32 With Ice - 49

Print Back

http://birdtechnologies.thomasnet.com/printitem/antennas/746-960-mhz-antennas/col85-87... 8/18/2011

ANTA_1101_1102_1103_1104_1105

3 ANTENNA REF #20

ANTA_1101_1102_1103_1104_1105

4 ANTENNA REF #21 TO #32

ValuLine® Antenna Ordering Information

17.3-17.7 GHz (WR51/R180)

Antenna	dia (in)	Freq (GHz)	Bot	Gain (dBi) Mid	Top	3dB BW (degs)	XPD (dB)	F/B (dB)	VSWR (R.L., dB)	Fine Degrees Azimuth	Adjustment Elevation	Survival Wind Speed mph (km/h)	Net Weight (lb (kg)
VP4-172	1.2	17.3 - 17.7	44.1	44.2	44.3	1.0	32	55	1.20 (20.8)*	±15	±20	125 (200)	79.0 (36.0)
VP4-173	1.8	17.3 - 17.7	47.5	47.6	47.7	0.8	32	58	1.20 (20.8)*	±5	±5	125 (200)	160 (72.5)
VHP1-173	0.3	17.3 - 17.7	32.4	32.5	32.6	3.8	30	58	1.20 (20.8)*	±10	±25	155 (250)	18 (8.2)
VHP2-173	0.6	17.3 - 17.7	38.2	38.3	38.5	1.9	32	60	1.20 (20.8)*	±10	±25	155 (250)	29.7 (13.5)
VHP3-180	0.8	17.7 - 19.7	40.7	41.0	41.6	1.5	32	66	1.20 (20.8)*	±15	±20	125 (200)	39 (26.5)
VHP4-180A	1.2	17.7 - 19.7	44.1	44.6	45.1	0.9	32	65	1.20 (20.8)*	±15	±20	125 (200)	126 (57.0)
VHP6-180A	1.8	17.7 - 19.7	47.5	48.0	48.5	0.7	32	70	1.20 (20.8)*	±5	±5	125 (200)	347 (157.5)
VHP3-180	0.3	17.7 - 19.7	32.4	32.9	33.3	3.6	30	58	1.25 (19.1)**	±10	±25	155 (250)	18 (8.2)
VHP2-180A	0.6	17.7 - 19.7	38.0	38.8	39.8	1.9	32	60	1.25 (19.1)**	±10	±25	155 (250)	29.7 (13.5)
VHP3-180A	0.8	17.7 - 19.7	40.5	41.4	42.3	1.5	32	66	1.25 (19.1)**	±15	±20	125 (200)	39 (26.5)
VHP4-180A	1.2	17.7 - 19.7	44.0	44.9	45.8	0.9	32	65	1.25 (19.1)**	±15	±20	125 (200)	126 (57.0)
VHP6-180A	1.8	17.7 - 19.7	47.4	47.9	48.4	0.7	32	70	1.25 (19.1)**	±5	±5	125 (200)	347 (157.5)
VHLP1-180	0.3	17.7 - 19.7	33.5	34.4	35.0	3.6	30	57	1.30 (17.7)	±10	±25	155 (250)	18 (8.2)
VHLP2-180	0.6	17.7 - 19.7	39.2	39.7	40.4	1.9	30	60	1.30 (17.7)	±10	±25	155 (250)	31.5 (14.3)
VHLP3-180	0.8	17.7 - 19.7	40.5	41.0	41.4	1.5	30	68	1.30 (17.7)	±15	±20	125 (200)	69 (31.2)
VHLP4-180	1.2	17.7 - 19.7	44.2	44.7	45.1	0.9	30	72	1.30 (17.7)	±15	±20	125 (200)	115 (52.0)
VHLP02-180	0.6	17.7 - 19.7	38.2	38.7	39.5	1.8	30	67	1.30 (17.7)	±10	±25	155 (250)	33 (15.0)

* : 1.15 (23.1) available on request
** : 1.20 (20.8) available on request

17.7-19.7 / 21.2-23.6 GHz Multiband (WR42/R220)

Antenna	dia (in)	Freq (GHz)	Bot	Gain (dBi) Mid	Top	3dB BW (degs)	XPD (dB)	F/B (dB)	VSWR (R.L., dB)	Fine Degrees Azimuth	Adjustment Elevation	Survival Wind Speed mph (km/h)	Net Weight (lb (kg)
VHP3-182I	0.6	17.7 - 19.7	37.6	38.1	38.6	1.9	30	62	1.30 (17.7)	±10	±25	155 (250)	29.7 (13.5)
		21.2 - 23.6	39.2	39.6	40.0	1.5	30	64	1.30 (17.7)				
VHP4-182I	1.2	17.7 - 19.7	42.7	44.2	44.7	0.9	30	68	1.30 (17.7)	±15	±20	125 (200)	126 (57.0)
		21.2 - 23.6	40.2	40.7	46.2	0.8	30	70	1.30 (17.7)				

The pre-assembly option is only applicable to 0.6m, 1.2m and 1.8m antennas. This applies to both standard profile and low profile antennas.

ANDREW.

Customer Service Center – Call Toll-Free 1-800-255-1479 • Visit us at: www.andrew.com

14

ValuLine® Antennas

Mechanical Specifications

VP6 and VHP6 - 6 ft Valuline® Standard and Shielded Antenna Dimensions

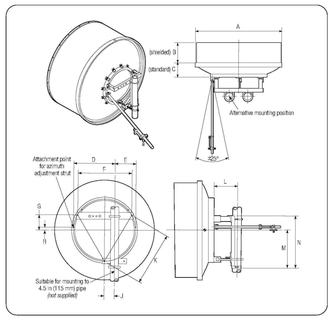

Dimensions in inches (mm)

Antenna Size, ft (m)	A	B	C	D	E	F	G
6 (1.8)	76.5 (1945)	34.7 (881)	12.75 (325)	18.8 (478)	9.7 (246)	26.5 (675)	7.65 (195)
	H	J	K	L	M	N	
	2.25 (60)	5.4 (137)	26.5 (675)	11.75 (300)	19.1 (488)	29.1 (740)	

31

SIMPSON GUMPERTZ & HEGER
Engineering of Structures and Building Enclosures

Simpson Gumpertz & Heger Inc.
The Landmark @ One Market, Suite 600
San Francisco, California 94105
415.495.3700 fax: 415.495.3550
www.sgh.com

Boston
Los Angeles
New York
San Francisco
Washington, DC

Consultant

No.	Date	Description	By
0		ISSUED FOR PERMIT	ROH

TOWER ANTENNA ADDITIONS SUTRO TOWER
1 LA AVANZADA ST
SAN FRANCISCO
CALIFORNIA
94131

Project

ANTENNA CUT SHEETS

Drawing Title

Commission	Checked	Date
067199.06	BW	09/26/11
Drawn	Approved	Scale
GV	ROH	AS NOTED

REGISTERED PROFESSIONAL ENGINEER RONALD D. HAMBERGER No. 2951 STRUCTURAL STATE OF CALIFORNIA

Seal

Drawing No.

S1.3

ANTENNA REF #33

Product Specifications — COMMSCOPE® (on the go)

Andrew Solutions
VHLP3-18-2WH
1.0 m | 3 ft ValuLine® High Performance Low Profile Antenna, single-polarized, 17.700–19.700 GHz, PBR220, white antenna, polymer white radome without flash, standard pack—one-piece reflector

General Specifications

Packing	Standard pack
Radome Color	White
Radome Material	Polymer
Reflector Construction	One-piece reflector
Antenna Input	PBR220
Antenna Color	White
Antenna Type	VHLP - ValuLine® High Performance Low Profile Antenna, single-polarized
Diameter, nominal	1.0 m | 3 ft
Flash Included	No
Polarization	Single

Electrical Specifications

Beamwidth, Horizontal	1.1 °
Beamwidth, Vertical	1.1 °
Cross Polarization Discrimination (XPD)	30 dB
Electrical Compliance	Brazil Anatel Class 2 | Canada SRSP 317.8 Part A | ETSI 302 217 Class 3 | US FCC Part 101A
Front-to-Back Ratio	71 dB
Gain, Low Band	42.7 dBi
Gain, Mid Band	43.5 dBi
Gain, Top Band	43.7 dBi
Operating Frequency Band	17.700 – 19.700 GHz
Radiation Pattern Envelope Reference (RPE)	7152
Return Loss	17.7 dB
VSWR	1.30

Mechanical Specifications

Fine Azimuth Adjustment	±15°
Fine Elevation Adjustment	±15°
Mounting Pipe Diameter	115 mm | 4.5 in
Net Weight	24 kg | 53 lb
Side Struts, Included	0
Side Struts, Optional	1 inboard
Wind Velocity Operational	200 km/h | 124 mph
Wind Velocity Survival Rating	250 km/h | 155 mph

Wind Forces At Wind Velocity Survival Rating

Angle α for MT Max	0 °
Axial Force (FA)	2979 N | 670 lbf
Side Force (FS)	936 N | 210 lbf

©2013 CommScope, Inc. All rights reserved. All trademarks identified by ® or ™ are registered trademarks, respectively, of CommScope. All specifications are subject to change without notice. See www.commscope.com for the most current information. Revised: November 2, 2012

Product Specifications — COMMSCOPE® (on the go)

VHLP3-18-2WH

Twisting Moment (MT)	1184 N•m
Weight with 1/2 in (12 mm) Radial Ice	46 kg | 101 lb
Zcg with 1/2 in (12 mm) Radial Ice	220 mm | 9 in
Zcg without Ice	324 mm | 13 in

©2013 CommScope, Inc. All rights reserved. All trademarks identified by ® or ™ are registered trademarks, respectively, of CommScope. All specifications are subject to change without notice. See www.commscope.com for the most current information. Revised: November 2, 2012

Product Specifications — COMMSCOPE® (on the go)

VHLP3-18-2WH

Wind Forces At Wind Velocity Survival Rating Image

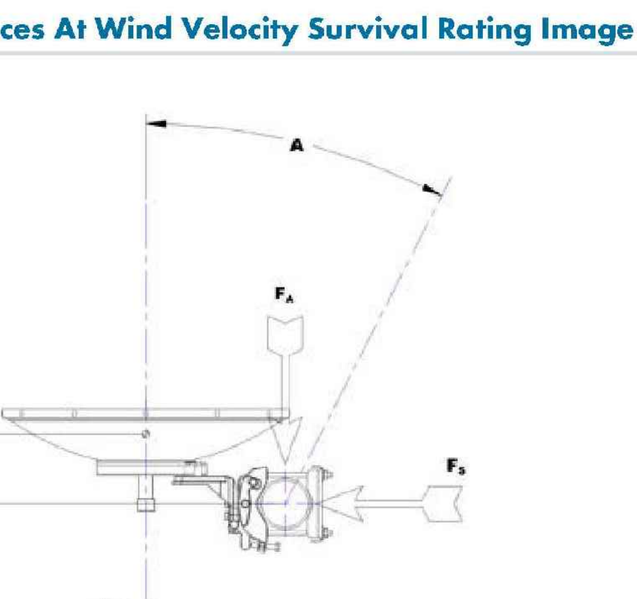

Packed Dimensions

Gross Weight, Packed Antenna	30.8 kg | 67.9 lb
Height	106.3 cm | 41.9 in
Length	119.8 cm | 47.2 in
Volume	467365.0 cc
Width	36.7 cm | 14.4 in

©2013 CommScope, Inc. All rights reserved. All trademarks identified by ® or ™ are registered trademarks, respectively, of CommScope. All specifications are subject to change without notice. See www.commscope.com for the most current information. Revised: November 2, 2012

Product Specifications — COMMSCOPE® (on the go)

VHLP3-18-2WH

Antenna Dimensions And Mounting Information

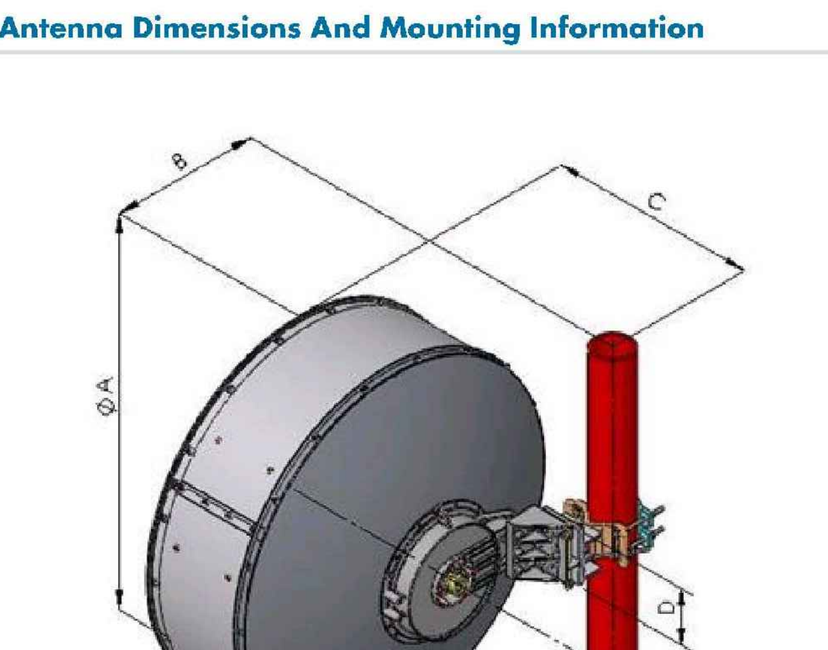

Dimensions in Inches (mm)				
Antenna Size, ft (m)	A	B	C	D
3(0.9)	39.4 (1000)	17.5 (445)	23.1 (586)	6.3 (160)

Regulatory Compliance/Certifications

Agency	Classification
ISO 9001:2008	Designed, manufactured and/or distributed under this quality management system

* Footnotes

Axial Force (FA)	Maximum forces exerted on a supporting structure as a result of wind from the most critical direction for this parameter. The individual maximums specified may not occur simultaneously. All forces are referenced to the mounting pipe.
Cross Polarization Discrimination (XPD)	The difference between the peak of the co-polarized main beam and the maximum cross-polarized signal over an angle twice the 3 dB beamwidth of the co-polarized main beam.
Front-to-Back Ratio	Denotes highest radiation relative to the main beam, at 180° ±40°, across the band. Production antennas do not exceed rated values by more than 2 dB unless stated otherwise.
Gain, Mid Band	For a given frequency band, gain is primarily a function of antenna size. The gain of Andrew antennas is determined by either gain by comparison or by computer integration of the measured antenna patterns.

©2013 CommScope, Inc. All rights reserved. All trademarks identified by ® or ™ are registered trademarks, respectively, of CommScope. All specifications are subject to change without notice. See www.commscope.com for the most current information. Revised: November 2, 2012

ANTA_S101_S102_S103_S104_S105

1 ANTENNA REF #33

ANTENNA REF #34

UBIQUITI NETWORKS
TECHNICAL SPECS/DATASHEET
PowerBridge M5: Carrier Class 5GHz MIMO Bridging Solution

airMAX
MIMO TDMA Protocol
Featuring Super-Efficient 25dBi MIMO Antenna Array



SYSTEM INFORMATION	
Processor Specs	Atheros MIPS 24KC, 400MHz
Memory Information	64MB SDRAM, 8MB Flash
Networking Interface	1 X 10/100 BASE-TX (Cat. 5, RJ-45) Ethernet Interface

REGULATORY / COMPLIANCE INFORMATION	
Wireless Approvals	FCC Part 15.247, IC RS210, CE
RoHS Compliance	YES

OPERATING FREQUENCY 5470MHz-5825MHz

5GHz TX POWER SPECIFICATIONS	DataRate	Avg. TX	Tolerance	5GHz RX SPECIFICATIONS	DataRate	Sensitivity	Tolerance
11a	1-24Mbps	27 dBm	+/-2dB	11a	24Mbps	-83 dBm	+/-2dB
	36Mbps	25 dBm	+/-2dB		36Mbps	-80 dBm	+/-2dB
	48Mbps	23 dBm	+/-2dB		48Mbps	-77 dBm	+/-2dB
	54Mbps	22 dBm	+/-2dB		54Mbps	-75 dBm	+/-2dB
5GHz 11n	MCS0	27 dBm	+/-2dB	5GHz 11n	MCS0	-96 dBm	+/-2dB
	MCS1	27 dBm	+/-2dB		MCS1	-95 dBm	+/-2dB
	MCS2	27 dBm	+/-2dB		MCS2	-92 dBm	+/-2dB
	MCS3	27 dBm	+/-2dB		MCS3	-90 dBm	+/-2dB
	MCS4	26 dBm	+/-2dB		MCS4	-86 dBm	+/-2dB
	MCS5	24 dBm	+/-2dB		MCS5	-83 dBm	+/-2dB
	MCS6	22 dBm	+/-2dB		MCS6	-77 dBm	+/-2dB
	MCS7	21 dBm	+/-2dB		MCS7	-74 dBm	+/-2dB
	MCS8	27 dBm	+/-2dB		MCS8	-95 dBm	+/-2dB
	MCS9	27 dBm	+/-2dB		MCS9	-93 dBm	+/-2dB
	MCS10	27 dBm	+/-2dB		MCS10	-90 dBm	+/-2dB
	MCS11	27 dBm	+/-2dB		MCS11	-87 dBm	+/-2dB
	MCS12	26 dBm	+/-2dB		MCS12	-84 dBm	+/-2dB
	MCS13	24 dBm	+/-2dB		MCS13	-79 dBm	+/-2dB
	MCS14	22 dBm	+/-2dB		MCS14	-78 dBm	+/-2dB
	MCS15	21 dBm	+/-2dB		MCS15	-75 dBm	+/-2dB

PHYSICAL / ELECTRICAL / ENVIRONMENTAL	
Enclosure Size	445 x 416 x 34mm
Weight	3.82kg
Enclosure Characteristics	Outdoor UV Stabalized Plastic
Mounting Kit	Pole Mounting Kit included
Max Power Consumption	8 Watts
Power Supply	24V, 1A surge portection integrated POE adapter included
Power Method	Passive Power over Ethernet (pairs 4,5+; 7,8 return)
Operating Temperature	-30C to +80C
Operating Humidity	5 to 95% Condensing
Shock and Vibration	ETSI300-019-1.4

INTEGRATED 2x2 MIMO ANTENNA			
Frequency Range	4.9-6.0 GHz	Max VSWR	1.1:1
Gain	24.8-26.5 dBi	H-pol Beamwidth	6 deg.
Polarization	Dual Linear	V-pol Beamwidth	6 deg.
Cross-pol Isolation	28dB minimum	Elevation Beamwidth	6 deg.

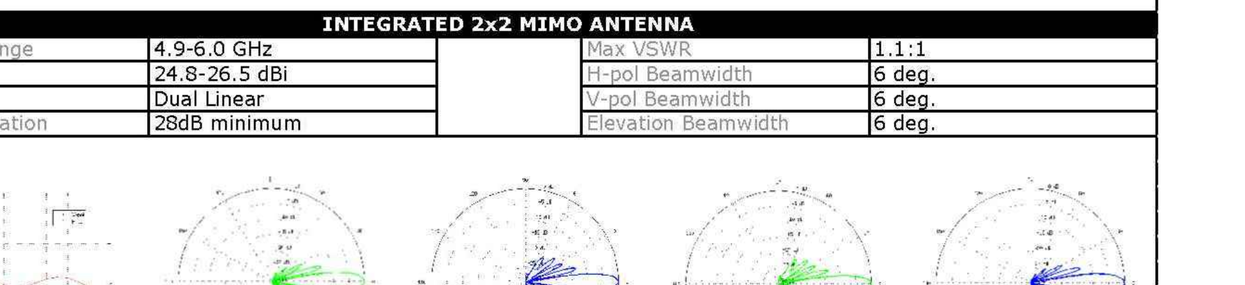

Ubiquiti Networks Inc., 91 E. Tasman Dr., San Jose, CA 95134 www.ubnt.com

ANTA_S101_S102_S103_S104_S105

2 ANTENNA REF #34

ANTENNA REF #49

KATHREIN SCALA DIVISION

CL-FM
FM Log Periodic Antenna
88–108 MHz

The Kathrein Scala Division CL-FM is a ruggedly built log-periodic antenna, designed for professional FM transmit and receive applications.

Like all Kathrein Scala Division antennas, the CL-FM is made of the finest materials using state of the art electrical and mechanical designs, resulting in superior performance and long service life.

The CL-FM may be used stand-alone or in stacked arrays for higher gain, increased side-lobe suppression, or custom azimuth patterns.

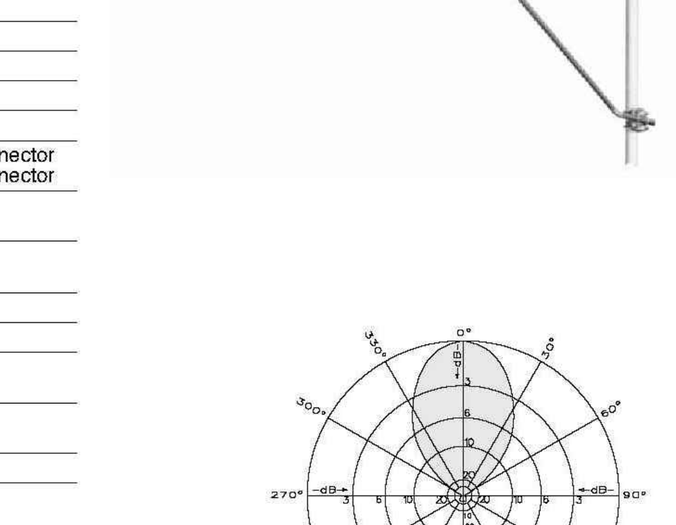

Specifications:

Frequency range	88–108 MHz (broadband)
Gain	7 dBd
Power gain	5.01
Impedance	50 or 75 ohms
VSWR	< 1.5:1
Polarization	Horizontal or vertical
Front-to-back ratio	>25 dB
Maximum input power	250 watts, type "N" 75 ohm connector 500 watts, type "N" 50 ohm connector
Azimuth pattern	52 degrees (half-power) horizontal polarization
Elevation pattern	78 degrees (half-power) horizontal polarization
Connector	Female 50Ω or 75Ω N
Weight	45 lb (20.4 kg)
Dimensions	104 x 67.9 inches (2642 x 1724 mm)
Wind load Front	at 100 mph (160 kph) 138 lbf (611 N) maximum
Wind survival rating*	120 mph (200 kph)
Shipping dimensions	116 x 14.5 x 6 inches (2946 x 369 x 153 mm)
Shipping weight	56 lb (25.4 kg)
Mounting	For masts of 2.375 inches (60 mm) OD.
CL-FM/HCM	Horizontal polarization center-mount
CL-FM/HRM	Horizontal polarization rear-mount
CL-FM/VRM	Vertical polarization rear-mount

See reverse for order information.

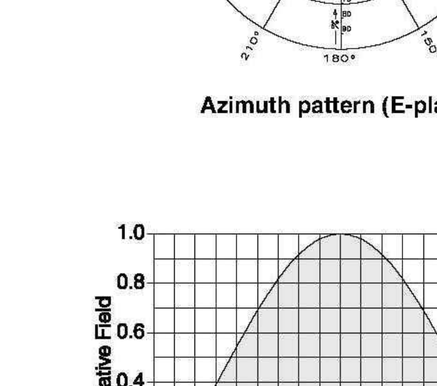

Azimuth pattern (E-plane)

* Mechanical design is based on environmental conditions as stipulated in TIA-222-G-2 (December 2009) and/or ETS 300 019-1-4 which include the static mechanical load imposed on an antenna by wind at maximum velocity. See the Engineering Section of the catalog for further details.



Elevation pattern (H-plane)

TÜV RoHS Lead-Free
10492-F

Kathrein Inc., Scala Division Post Office Box 4580 Medford, OR 97501 (USA) Phone: (541) 779-6500 Fax: (541) 779-3991
Email: communications@kathrein.com Internet: www.kathrein-scala.com

KATHREIN SCALA DIVISION

CL-FM
FM Log Periodic Antenna
88–108 MHz

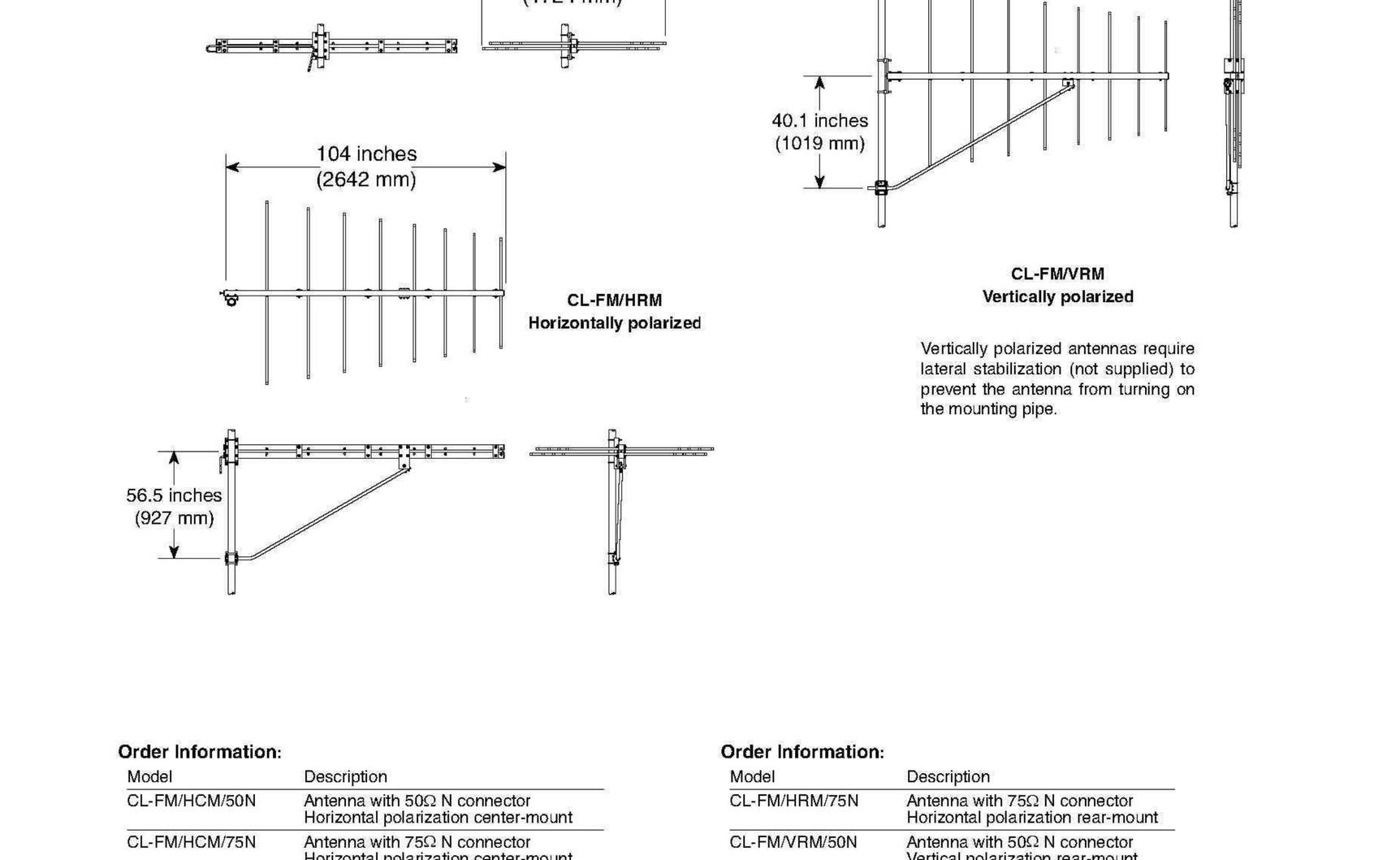

Vertically polarized antennas require lateral stabilization (not supplied) to prevent the antenna from turning on the mounting pipe.

Order Information:

Model	Description
CL-FM/HCM/50N	Antenna with 50Ω N connector Horizontal polarization center-mount
CL-FM/HCM/75N	Antenna with 75Ω N connector Horizontal polarization center-mount
CL-FM/HRM/50N	Antenna with 50Ω N connector Horizontal polarization rear-mount

Order Information:

Model	Description
CL-FM/HRM/75N	Antenna with 75Ω N connector Horizontal polarization rear-mount
CL-FM/VRM/50N	Antenna with 50Ω N connector Vertical polarization rear-mount

All specifications are subject to change without notice. The latest specifications are available at www.kathrein-scala.com.

Kathrein Inc., Scala Division Post Office Box 4580 Medford, OR 97501 (USA) Phone: (541) 779-6500 Fax: (541) 779-3991
Email: communications@kathrein.com Internet: www.kathrein-scala.com

ANTA_S101_S102_S103_S104_S105

3 ANTENNA REF #49

ANTENNA REF #50

Dielectric

Proposal #: C-05211 Antenna Type: TFU-24DSC/VP-R C160 SP Channel: 14 DTV
Call Letters: Location: San Francisco, CA

Electrical Specifications		Value Ratio	dBd	Remarks
RMS Gain at Main Lobe over Halfwave Dipole	Hpol			
	Vpol			
RMS Gain at Horizontal over Halfwave Dipole	Hpol			
	Vpol			
Peak Directional Gain over Halfwave Dipole	Hpol	25.7	14.10	
	Vpol	6.4	8.06	
Peak Directional Gain at Horizontal over Halfwave Dipole	Hpol	20.1	13.03	
	Vpol	5.0	6.99	
Circularity Directional			dB	
Axial Ratio			dB	
Beam Tilt		0.75 deg		
Average Power DTV		40 kW	16.02 dBk	
Antenna Input: T/L		6 1/8 in	75.0 ohm	Type: EIA/DCA
Maximum Antenna Input VSWR		Channel	1.08 : 1	Notes:
Patterns Azimuth		C160-4730	C160-V-4730	
Patterns Elevation		24Q190075	24Q190075-90	

Mechanical Specifications		Metric	English	Preliminary	
Height with Lightning Protector	H4	m	ft	Side mounted	
Height Less Lightning Protector	H2	17.1 m	56.1 ft		
Height of Center of Radiation	H3	9.0 m	28.1 ft		
Basic Wind Speed	V	136.8 km/h	85 mi/h		
Structure Class IV		Exposure Category C	Topographic Category 1		TIA-222-G.
Effective Projected Area	(EPA)s	4.1 m²	44.5 ft²	Excludes Mounts	
Moment Arm	D1	m	ft		
Effective Projected Area	(EPA)s	m²	ft²		
Moment Arm	D3	m	ft		
Pole Bury Length	D2	m	ft		
Weight	W	0.6 t	1,250 lbs	Excludes Mounts	
Radome					

Antenna designed in accordance with AISC specifications for design of structural steel for building as prescribed by TIA-222-G. **Mechanical Loads Exclude Mounts**

NOTE:
Prepared By: KLP — rick.RMS@spx.com (digitally signed) — Approved By: john.schadler@spx.com (Digitally signed by john.schadler@spx.com, Date: 2013.01.25 08:20:29 -05'00')
Original Date: 21-Jan-12

This document contains proprietary and confidential information of Dielectric Communications and SPX Corporation. It is to be used solely for the purpose for which it is provided. No disclosure, reproduction, or use of this document or any part of it may be made without the written permission of Dielectric Communications or SPX Corporation.

Dielectric

Proposal #: C-05211 Antenna Type: TFU-24DSC/VP-R C160 SP Channel: 14 DTV
Call Letters: Location: San Francisco, CA

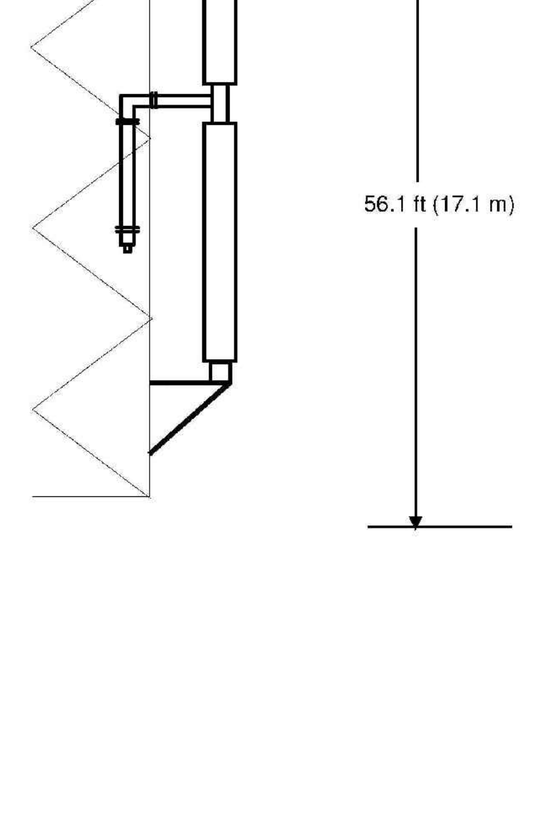

Mechanical Specifications
TIA-222-G. @ 85 mi/h (136.8 km/h)

$(EPA)s = 44.5\ ft^2 (4.1\ m^2)$
W = 1250 lbs(0.6 t)

Structure Class =IV
Exposure Category = C
Topographic Category = 1

TFU-24DSC/VP-R C160 SP
Channel: D14

JBC-080923-2 Not to Scale

This document contains proprietary and confidential information of Dielectric Communications and SPX Corporation. It is to be used solely for the purpose for which it is provided. No disclosure, reproduction, or use of this document or any part of it may be made without the written permission of Dielectric Communications or SPX Corporation.

Dielectric

Proposal Number	C-05211
Date	21-Jan-12
Call Letters	Channel 14
Location	San Francisco, CA
Customer	
Antenna Type	TFU-24DSC/VP-R C160 SP

SYSTEM SUMMARY

Antenna:

			H Pol		V Pol	
Type:	TFU-24DSC/VP-R C160 S	ERP:	1000 kW	(30.00 dBk)	250 kW	(23.98 dBk)
Channel:	14	Peak Gain*:	25.7	(14.10 dB)	6.4	(8.08 dB)
Location:	San Francisco, CA	Input Power:	38.9 kW	(15.90 dBk)		

Transmission Line:

Type:	EIA/DCA	Attenuation:	1.15 dB
Size:	6-1/8 In	Efficiency:	76.7%
Impedance:	75 ohm		
Length:	1,100 ft	335.3 m	

Transmitter:

Power Required: 50.7 kW (17.05 dBk)

* Gain is with respect to half wave dipole.

This document contains proprietary and confidential information of Dielectric Communications and SPX Corporation. It is to be used solely for the purpose for which it is provided. No disclosure, reproduction, or use of this document or any part of it may be made without the written permission of Dielectric Communications or SPX Corporation.

ANTA_S101_S102_S103_S104_S105

4 ANTENNA REF #50

SIMPSON GUMPERTZ & HEGER
Engineering of Structures and Building Enclosures

Simpson Gumpertz & Heger Inc.
The Landmark @ One Market, Suite 600
San Francisco, California 94105
415.495.3700 fax: 415.495.3550
www.sgh.com

Boston
Los Angeles
New York
San Francisco
Washington, DC

Consultant

No.	Date	Description	By
0		ISSUED FOR PERMIT	ROH

Project

TOWER ANTENNA ADDITIONS
SUTRO TOWER
1 LA AVANZADA ST
SAN FRANCISCO
CALIFORNIA
94131

Drawing Title

ANTENNA CUT SHEETS

Commission 067199.06	Checked BW	Date 09/26/11
Drawn GV	Approved ROH	Scale AS NOTED

Seal: REGISTERED PROFESSIONAL ENGINEER — RONALD O. HAMBURGER — No. 2951 — STRUCTURAL — STATE OF CALIFORNIA

Drawing No.

S1.4

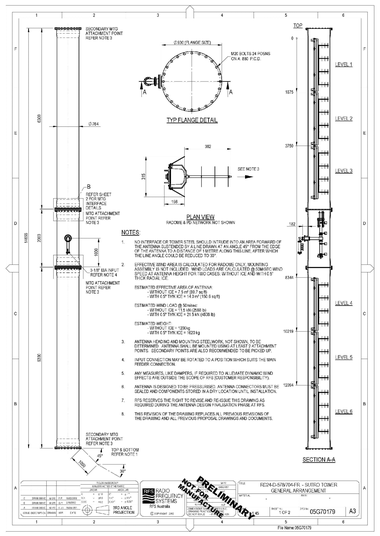

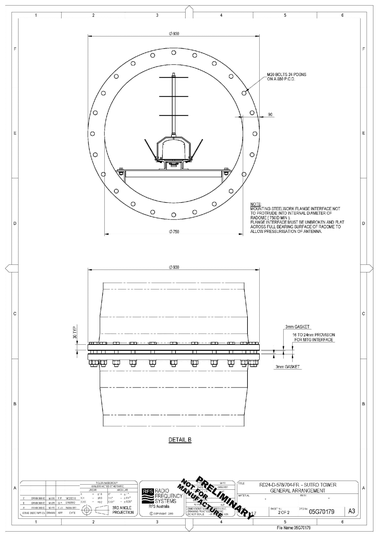

ANTA_5101_5102_5103_5104_5105

1 ANTENNA REF #2 AND #3

Dielectric

Prepared #: C-05212
Call Letters:
Antenna Type: TFU-10DSC/VP-R SP C160 AUX
Location: San Francisco, CA
Channel: 14 DTV

Electrical Specifications		Value Ratio	Value dBd	Remarks
RMS Gain at Max Lobe over Halfwave Dipole	Hpol			
	Vpol			
RMS Gain at Horizontal over Halfwave Dipole	Hpol			
	Vpol			
Peak Directional Gain over Halfwave Dipole	Hpol	13.5	11.24	
	Vpol	3.3	5.19	
Peak Directional Gain at Horizontal over Halfwave Dipole	Hpol	17.4	16.93	
	Vpol	3.1	4.91	
Circularity Directional		dB		
Axial Ratio		dB		
Beam Tilt		0.75 deg		
Average Power DTV		50 kW	14.77 dBk	
Antenna Input TX		6.18 in	75.0 ohm	Type: EIA/DCA
Maximum Antenna Input VSWR		Channel:	1.08 : 1	Notes:
Patterns	Azimuth	CH0-4710	CH0-V-4710	
	Elevation	HQQ98075	HQQ98075-90	

Mechanical Specifications		Metric	English		Preliminary
Height with Lightning Protector	HH	m	ft	Side mounted	
Height Less Lightning Protector	HZ	8.2 m	27.0 ft		
Height of Center of Radiation	HA	4.0 m	13.3 ft		
Basic Wind Speed	V	150.8 km/h	95 mi/h		
Structure Class IV	Exposure Category	C	Topographic Category	1	TIA-222-G
Effective Projected Area	(EPA)t	2.0 m²	22.0 ft²	Excludes Mounts	
Moment Arm	DA	m	ft		
Effective Projected Area	(EPA)a	m²	ft²		
Moment Arm	DA	m	ft		
Pole Bury Length	DG	m	ft		
Weight	W	0.5 t	400 lbs	Excludes Mounts	
Radome					

Antenna designed in accordance with ASSC specifications for design of structural steel for building as prescribed by TIA-222-G **Mechanical Loads Exclude Mounts**

NOTE:
Prepared By : CAB
Original Date : 24-Jan-13

Approved By : dick.whitehead@sbcglobal.net

This document contains proprietary and confidential information of Dielectric Communications and SPX Corporation. It is to be used solely for the purpose for which it is provided. No disclosure, reproduction, or use of this document or any part of it may be made without the written permission of Dielectric Communications or SPX Corporation.

john.schadler@sbcglobal.net
Digitally signed by john.schadler@sbcglobal.net
DN: cn=john.schadler@sbcglobal.net
Date: 2013.01.24 14:16:21 -08'00'

Dielectric

Prepared #: C-05212
Call Letters:
Antenna Type: TFU-10DSC/VP-R SP C160 AUX
Location: San Francisco, CA
Channel: 14 DTV

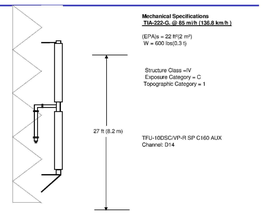

Mechanical Specifications
TIA-222-G, @ 85 m/h (136.8 km/h)

(EPA)a = 22 ft²@ m²)
W = 600 lbs(0.3 t)

Structure Class =IV
Exposure Category = C
Topographic Category = 1

Not to Scale

This document contains proprietary and confidential information of Dielectric Communications and SPX Corporation. It is to be used solely for the purpose for which it is provided. No disclosure, reproduction, or use of this document or any part of it may be made without the written permission of Dielectric Communications or SPX Corporation.

JJG-080923-2

Dielectric

Proposal Number: C-05212
Date: 24-Jan-13
Call Letters:
Channel: 14
Location: San Francisco, CA
Customer:
Antenna Type: TFU-10DSC/VP-R SP C160 AUX

SYSTEM SUMMARY

Antenna:

			H Pol	V Pol
Type:	TFU-10DSC/VP-R SP C160	ERP:	400 kW (26.02 dBk)	100 kW (20.00 dBk)
Channel:	14	Peak Gain*:	13.3 (11.23 dB)	3.3 (5.21 dB)
Location:	San Francisco, CA	Input Power:	30 kW (14.79 dBk)	

Transmission Line:

Type:	EIA/DCA	Attenuation:	1.15 dB
Size:	6-1/8 in	Efficiency:	76.7%
Impedance:	75 ohm		
Length:	1,100 ft	335.3 m	

Transmitter:

Power Required: 39 kW (15.94 dBk)

* Gain is with respect to half wave dipole.

This document contains proprietary and confidential information of Dielectric Communications and SPX Corporation. It is to be used solely for the purpose for which it is provided. No disclosure, reproduction, or use of this document or any part of it may be made without the written permission of Dielectric Communications or SPX Corporation.

ANTA_5101_5102_5103_5104_5105

2 ANTENNA REF #52

SIMPSON GUMPERTZ & HEGER
Engineering of Structures and Building Enclosures

Simpson Gumpertz & Heger Inc.
The Landmark @ One Market, Suite 600
San Francisco, California 94105
415.495.3700 fax: 415.495.3550
www.sgh.com

Boston
Los Angeles
New York
San Francisco
Washington, DC

Consultant

No.	Date	Description	By
0		ISSUED FOR PERMIT	ROH

TOWER ANTENNA ADDITIONS
SUTRO TOWER
1 LA AVANZADA ST
SAN FRANCISCO
CALIFORNIA
94131

Project

ANTENNA CUT SHEETS

Drawing Title

Commission	Checked	Date
067199.06	BW	09/26/11
Drawn: GV	Approved: ROH	Scale: AS NOTED

Drawing No.

S1.5

Seal

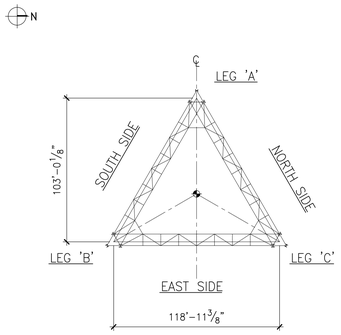

KEY PLAN – 2ND LEVEL

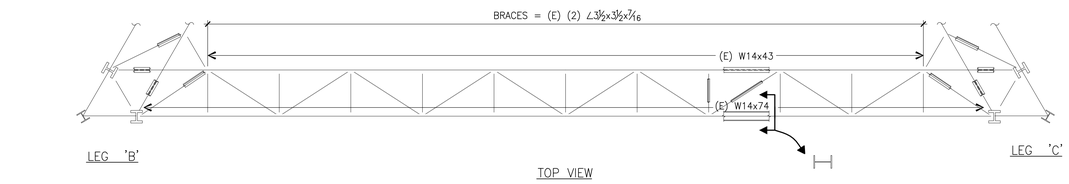

TOP VIEW

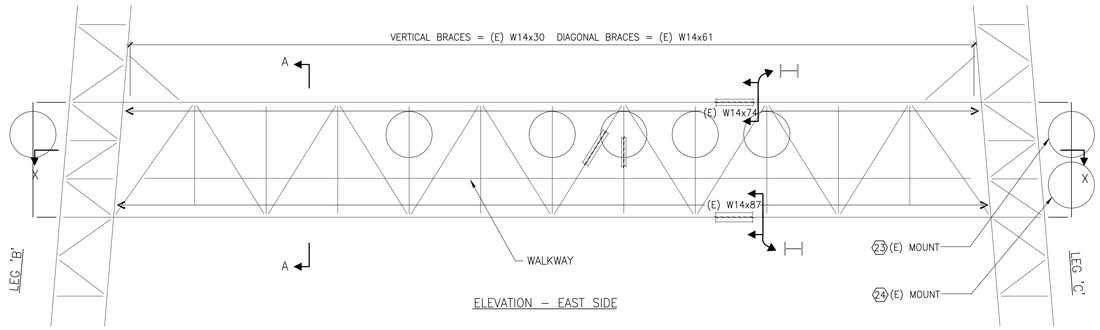

ELEVATION – EAST SIDE

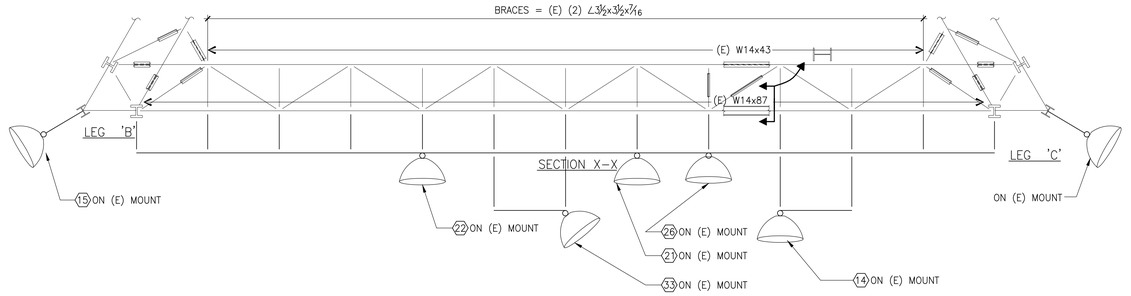

SECTION X–X

2ND LEVEL – EAST SIDE

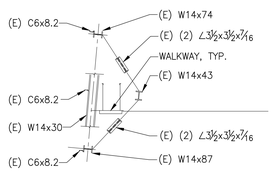

SECTION A–A

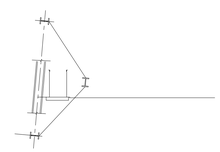

SECTION B–B

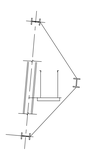

SECTION C–C

SIMPSON GUMPERTZ & HEGER
Engineering of Structures and Building Enclosures

Simpson Gumpertz & Heger Inc.
The Landmark @ One Market, Suite 600
San Francisco, California 94105
415.495.3700 fax: 415.495.3550
www.sgh.com

Boston
Los Angeles
New York
San Francisco
Washington, DC

Consultant

No.	Date	Description	By
0		ISSUED FOR PERMIT	ROH

TOWER ANTENNA ADDITIONS
SUTRO TOWER
1 LA AVANZADA ST
SAN FRANCISCO
CALIFORNIA
94131

Project

2ND LEVEL FRAMING

Drawing Title

Commission	Checked	Date
067199.06	BW	09/26/11
Drawn: GV	Approved: ROH	Scale: 1/8"=1'-0"

REGISTERED PROFESSIONAL ENGINEER
RONALD O. HAMBURGER
No. 2951
STRUCTURAL
STATE OF CALIFORNIA

Seal

Drawing No.

S2.1

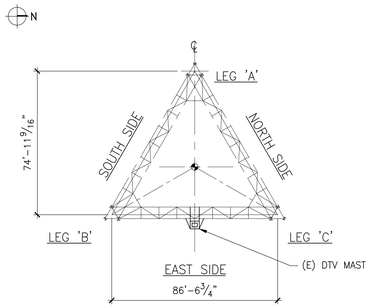

KEY PLAN – 3RD LEVEL

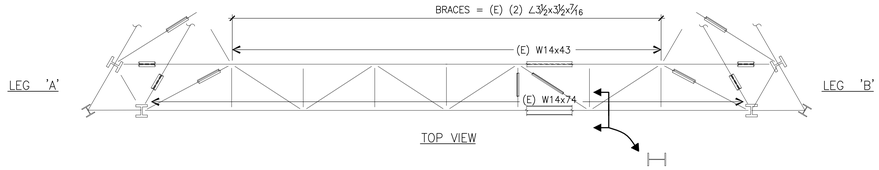

TOP VIEW

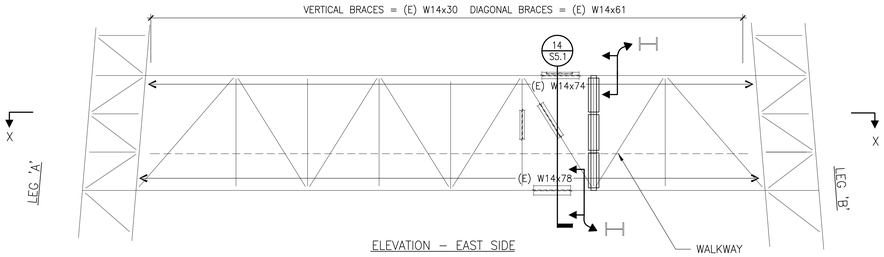

ELEVATION – EAST SIDE

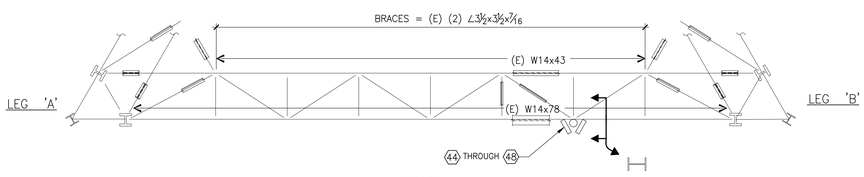

SECTION X–X

3RD LEVEL – SOUTH SIDE

NOTE:
⟨#⟩ INDICATES EQUIPMENT REFERENCE ID, SEE EQUIPMENT LIST, SHEET S1.0

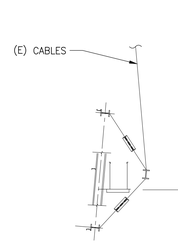

SECTION A–A

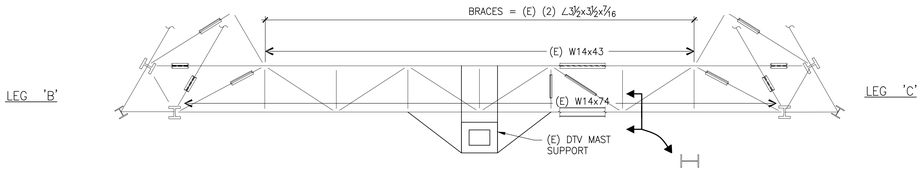

TOP VIEW

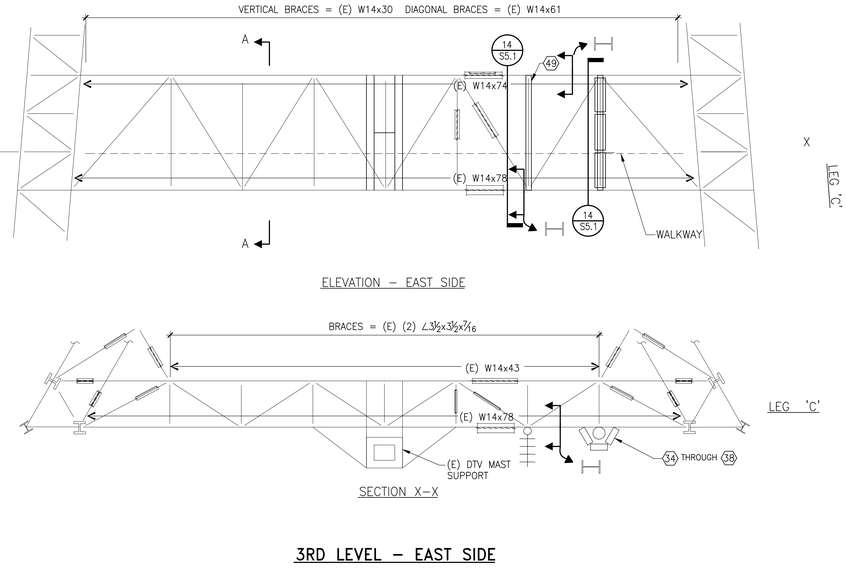

ELEVATION – EAST SIDE

SECTION X–X

3RD LEVEL – EAST SIDE

NOTE:
⟨#⟩ INDICATES EQUIPMENT REFERENCE ID, SEE EQUIPMENT LIST, SHEET S1.0

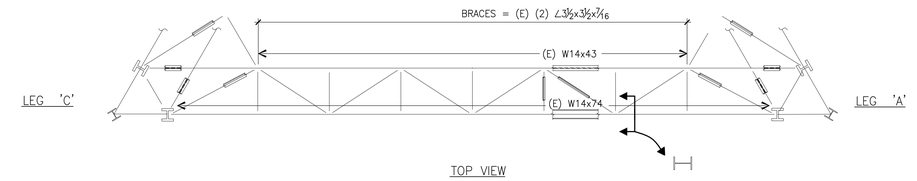

TOP VIEW

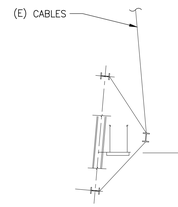

SECTION A–A

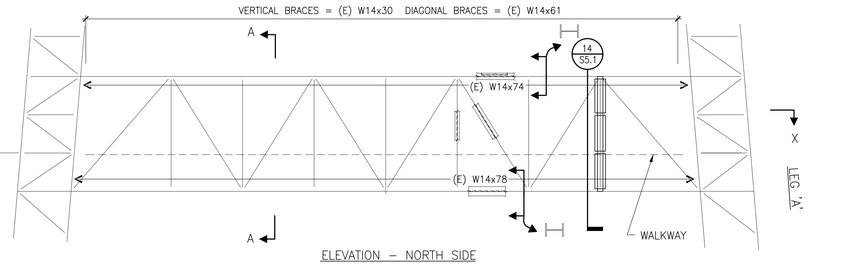

ELEVATION – NORTH SIDE

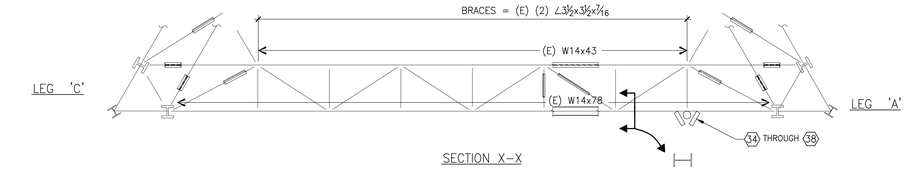

SECTION X–X

3RD LEVEL – NORTH SIDE

* NOTE:
SEE EAST SIDE FOR MEMBER SHAPES.

SIMPSON GUMPERTZ & HEGER
Engineering of Structures and Building Enclosures

Simpson Gumpertz & Heger Inc.
The Landmark @ One Market, Suite 600
San Francisco, California 94105
415.495.3700 fax: 415.495.3550
www.sgh.com

Boston
Los Angeles
New York
San Francisco
Washington, DC

Consultant

No.	Date	Description	By
0		ISSUED FOR PERMIT	ROH

TOWER ANTENNA ADDITIONS
SUTRO TOWER
1 LA AVANZADA ST
SAN FRANCISCO
CALIFORNIA
94131
Project

3RD LEVEL FRAMING
Drawing Title

Commission	Checked	Date
067199.06	BW	09/26/11
Drawn	Approved	Scale
GV	ROH	1/8"=1'-0"

REGISTERED PROFESSIONAL ENGINEER
RONALD O. HAMBURGER
No. 2951
STRUCTURAL
STATE OF CALIFORNIA
Seal

Drawing No.
S2.2

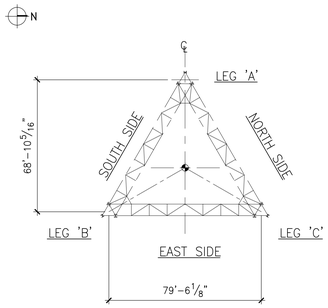

KEY PLAN – 5TH LEVEL

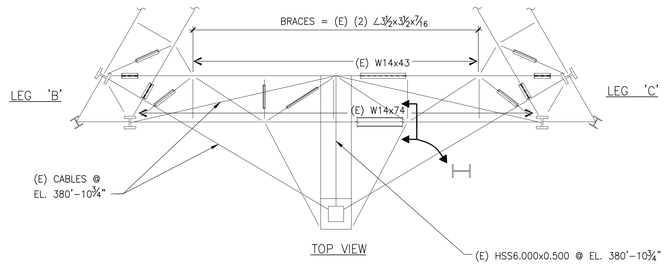

TOP VIEW

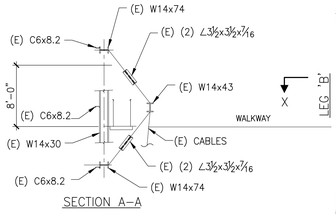

SECTION A–A

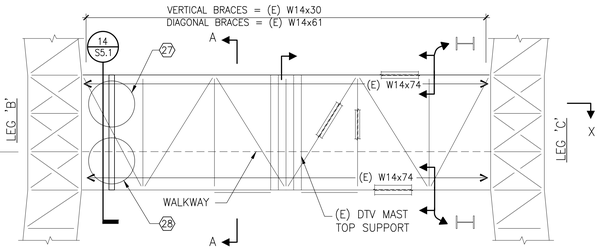

ELEVATION – EAST SIDE

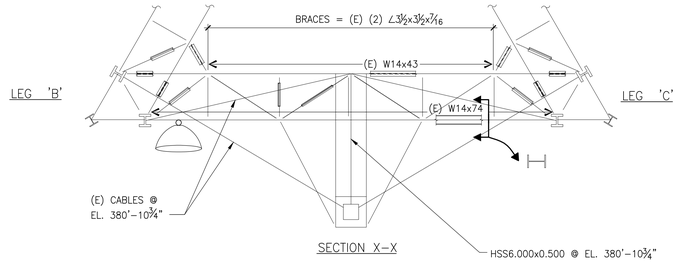

SECTION X–X

4TH LEVEL – EAST SIDE

* NOTE:
MEMBER SHAPES ARE THE SAME FOR NORTH AND SOUTH SIDE

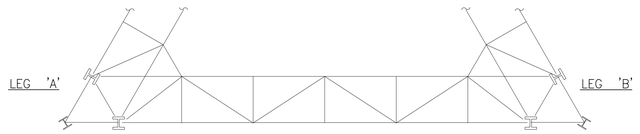

TOP VIEW

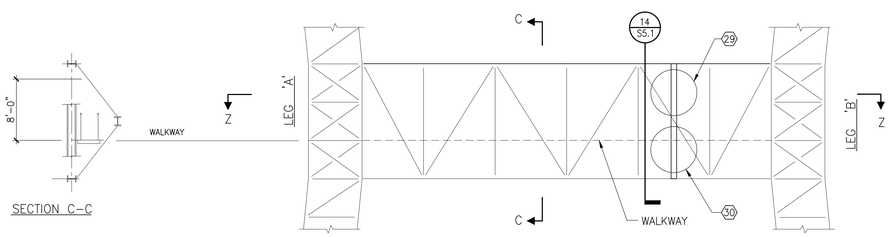

SECTION C–C

ELEVATION – SOUTH SIDE

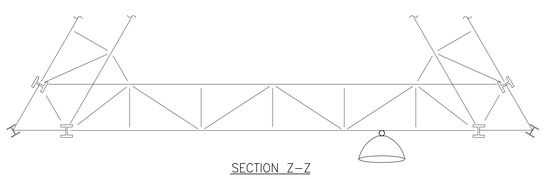

SECTION Z–Z

4TH LEVEL – SOUTH SIDE

* NOTE:
SEE EAST SIDE FOR MEMBER SHAPES.

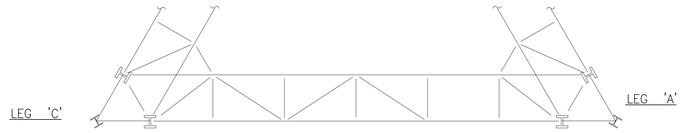

TOP VIEW

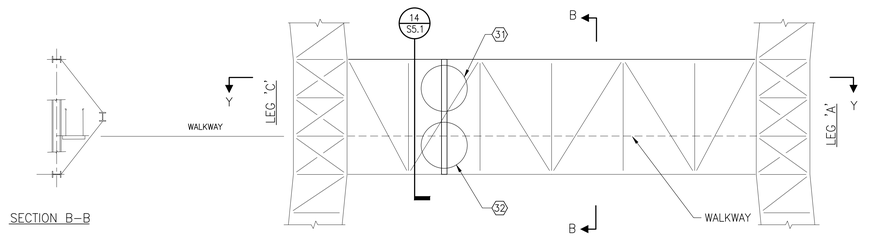

SECTION B–B

ELEVATION – NORTH SIDE

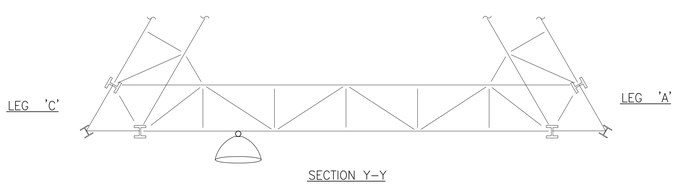

SECTION Y–Y

4TH LEVEL – NORTH SIDE

* NOTE:
SEE EAST SIDE FOR MEMBER SHAPES.

SIMPSON GUMPERTZ & HEGER
Engineering of Structures and Building Enclosures

Simpson Gumpertz & Heger Inc.
The Landmark @ One Market, Suite 600
San Francisco, California 94105
415.495.3700 fax: 415.495.3550
www.sgh.com

Boston
Los Angeles
New York
San Francisco
Washington, DC

Consultant

SHEET NOTES:

1. THIS DRAWING IS FOR RECORD ONLY. NO WORK REQUIRED FOR THIS SHEET.

No.	Date	Description	By
0		ISSUED FOR PERMIT	ROH

TOWER ANTENNA ADDITIONS
SUTRO TOWER
1 LA AVANZADA ST
SAN FRANCISCO
CALIFORNIA
Project **94131**

4TH LEVEL FRAMING
Drawing Title

Commission	Checked	Date
067199.06	BW	09/26/11
Drawn	Approved	Scale
GV	ROH	1/8"=1'-0"

REGISTERED PROFESSIONAL ENGINEER
RONALD O. HAMBURGER
No. 2951
STRUCTURAL
STATE OF CALIFORNIA
Seal

Drawing No.
S2.3

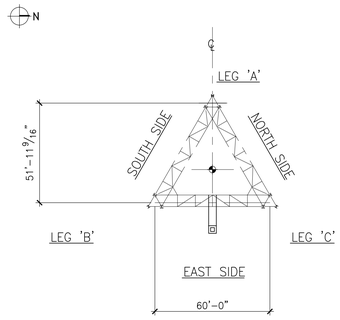

KEY PLAN – 4TH LEVEL

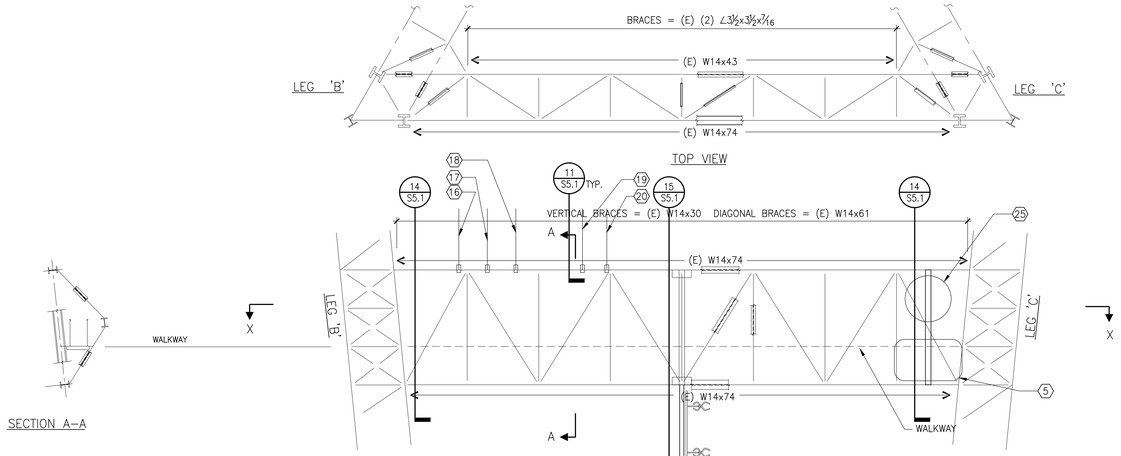

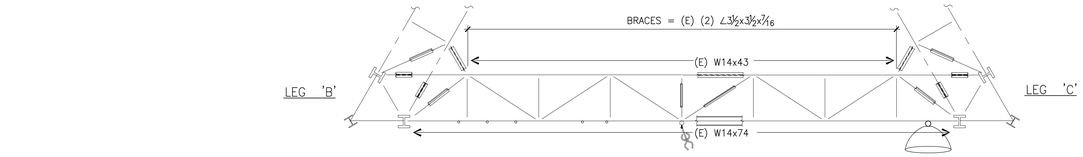

SECTION X–X

SECTION A–A

5TH LEVEL – EAST SIDE

SIMPSON GUMPERTZ & HEGER
Engineering of Structures and Building Enclosures

Simpson Gumpertz & Heger Inc.
The Landmark @ One Market, Suite 600
San Francisco, California 94105
415.495.3700 fax: 415.495.3550
www.sgh.com

Boston
Los Angeles
New York
San Francisco
Washington, DC

Consultant

SHEET NOTES:

No.	Date	Description	By
0		ISSUED FOR PERMIT	ROH

TOWER ANTENNA ADDITIONS
SUTRO TOWER
1 LA AVANZADA ST
SAN FRANCISCO
CALIFORNIA
94131
Project

5TH LEVEL FRAMING
Drawing Title

Commission	Checked	Date
067199.06	BW	09/26/11
Drawn	Approved	Scale
GV	ROH	1/8"=1'–0"

REGISTERED PROFESSIONAL ENGINEER
RONALD D. HAMBURGER
No. 2951
STRUCTURAL
STATE OF CALIFORNIA
Seal

Drawing No.
S2.4

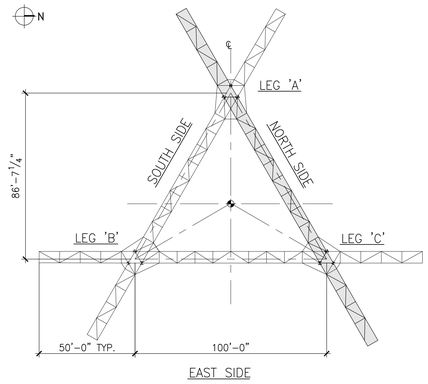

EAST SIDE

KEY PLAN – 6TH LEVEL

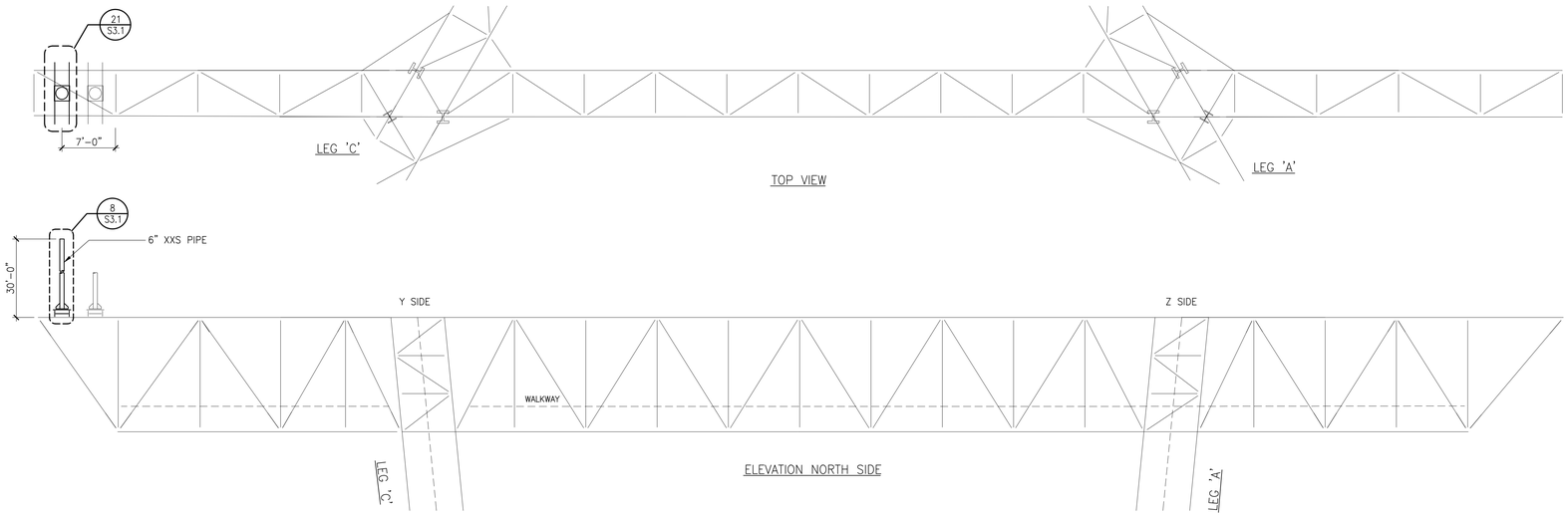

TOP VIEW

ELEVATION NORTH SIDE

SIMPSON GUMPERTZ & HEGER

Engineering of Structures and Building Enclosures

Simpson Gumpertz & Heger Inc.
The Landmark @ One Market, Suite 600
San Francisco, California 94105
415.495.3700 fax: 415.495.3550
www.sgh.com

Boston
Los Angeles
New York
San Francisco
Washington, DC

Consultant

No.	Date	Description	By
0		ISSUED FOR PERMIT	ROH

TOWER ANTENNA ADDITIONS
SUTRO TOWER
1 LA AVANZADA ST
SAN FRANCISCO
CALIFORNIA
94131

Project

6TH LEVEL FRAMING NORTH SIDE

Drawing Title

Commission	Checked	Date
067199.06	BW	09/26/11
Drawn	Approved	Scale
GV	ROH	1/8"=1'-0"

REGISTERED PROFESSIONAL ENGINEER
RONALD O. HAMBURGER
No. 2951
STRUCTURAL
STATE OF CALIFORNIA

Seal

Drawing No.

S2.5

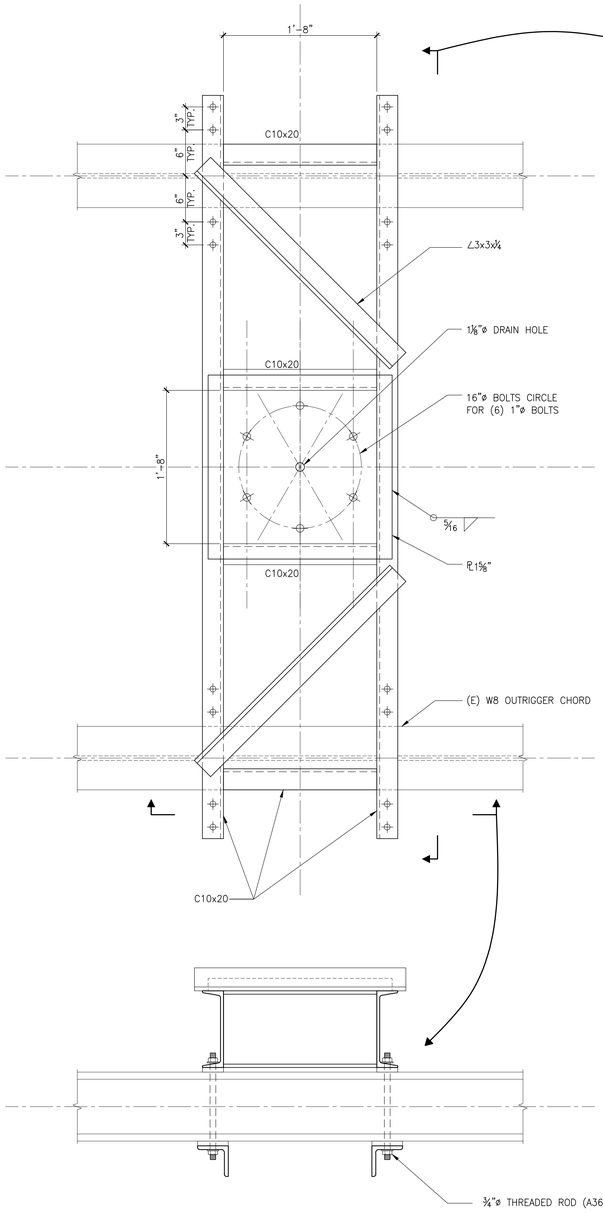

21 KREV-FM ANTENNA MOUNT

SCALE: 1 1/2"=1'-0"

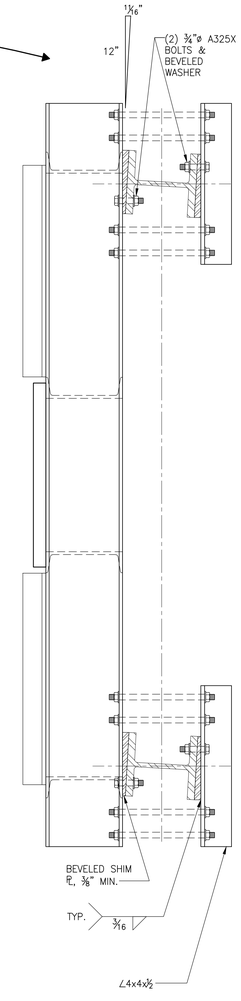

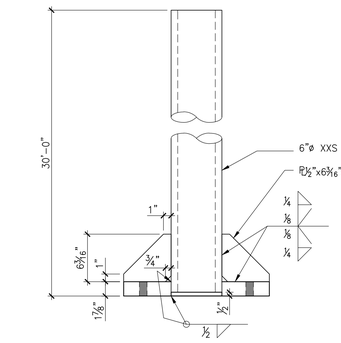

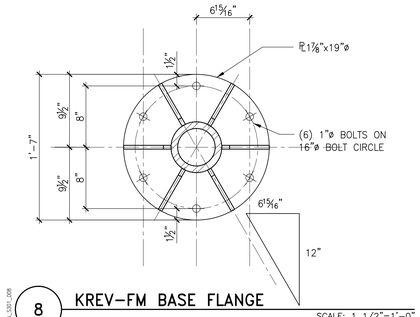

8 KREV-FM BASE FLANGE

SCALE: 1 1/2"=1'-0"

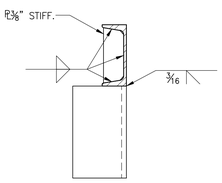

13 DETAIL

SCALE: 3"=1'-0"

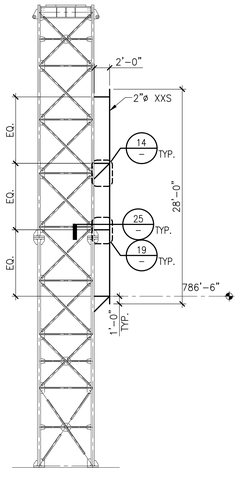

23 ANTENNA MOUNT STACK "B"

SCALE: 1/8"=1'-0"

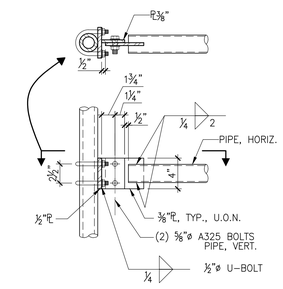

9 DETAIL

SCALE: 1 1/2"=1'-0"

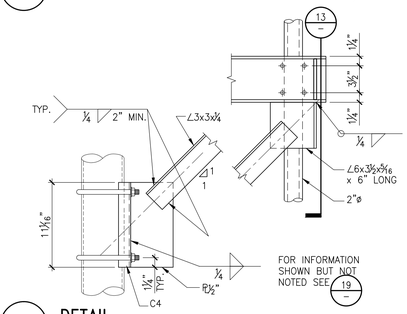

14 DETAIL

SCALE: 1 1/2"=1'-0"

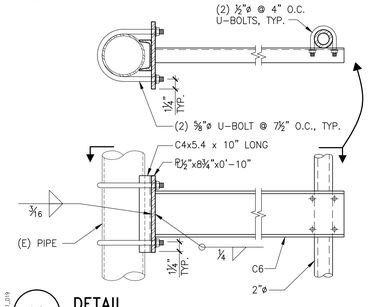

19 DETAIL

SCALE: 1 1/2"=1'-0"

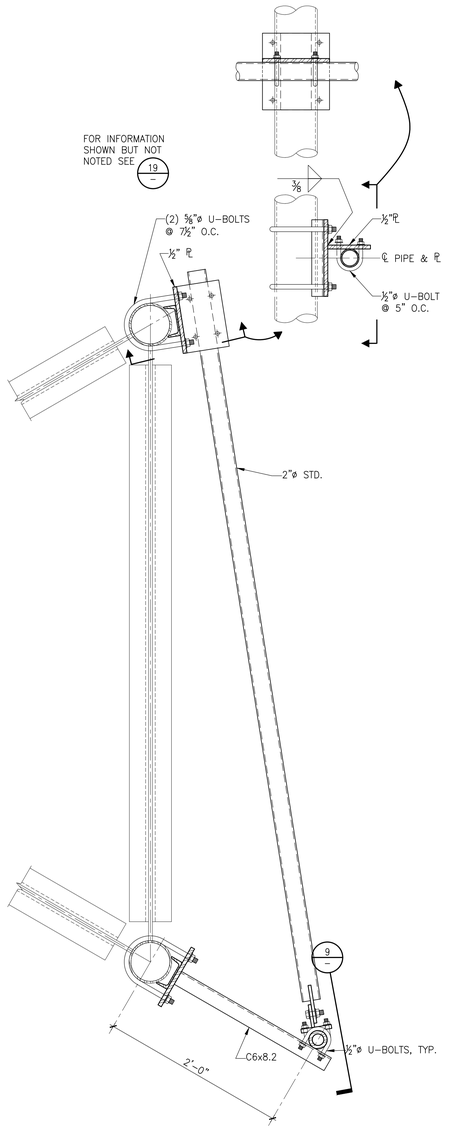

25 STIFF ARM TOP & BOTTOM AND AT KNEE BRACE

SCALE: 1 1/2"=1'-0"

SIMPSON GUMPERTZ & HEGER

Engineering of Structures and Building Enclosures

Simpson Gumpertz & Heger Inc.
The Landmark @ One Market, Suite 600
San Francisco, California 94105
415.495.3700 fax: 415.495.3550
www.sgh.com

Boston
Los Angeles
New York
San Francisco
Washington, DC

Consultant

No.	Date	Description	By
0		ISSUED FOR PERMIT	ROH

TOWER ANTENNA ADDITIONS
SUTRO TOWER
1 LA AVANZADA ST
SAN FRANCISCO
CALIFORNIA
94131

Project

ANTENNA MOUNTS STACKS "A" "B" & "C"

Drawing Title

Commission	Checked	Date
067199.06	BW	09/26/11
Drawn	Approved	Scale
GV	ROH	AS NOTED

REGISTERED PROFESSIONAL ENGINEER RONALD O. HAMBURGER No. 2951 STRUCTURAL STATE OF CALIFORNIA

Seal

Drawing No.

S3.1

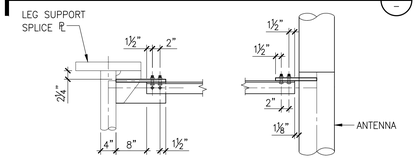

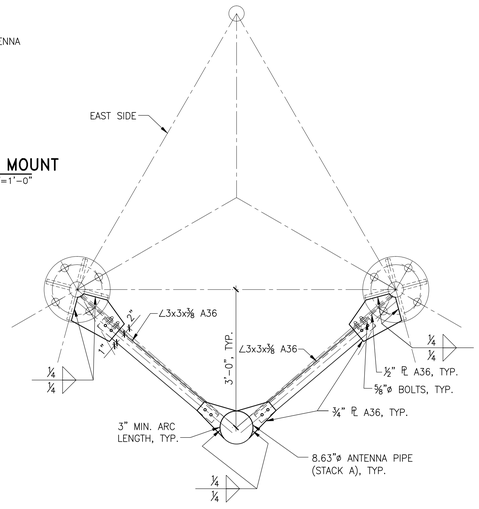

1 DETAIL AT STACK SPLICE – ANTENNA MOUNT STACKS "A"
SCALE: 3/4"=1'-0"

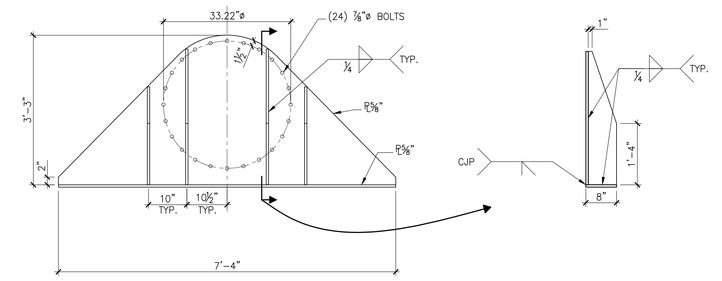

4 TOP AND BOTTOM ANTENNA MOUNT PLATE
SCALE: 3/4"=1'-0"

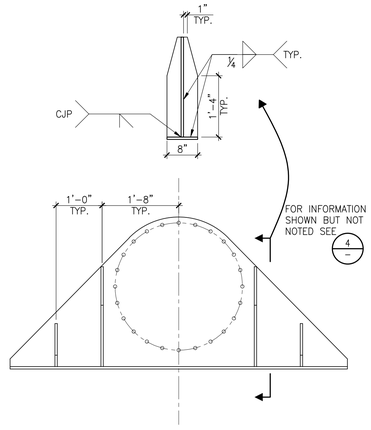

13 MIDDLE ANTENNA MOUNT PLATE
SCALE: 3/4"=1'-0"

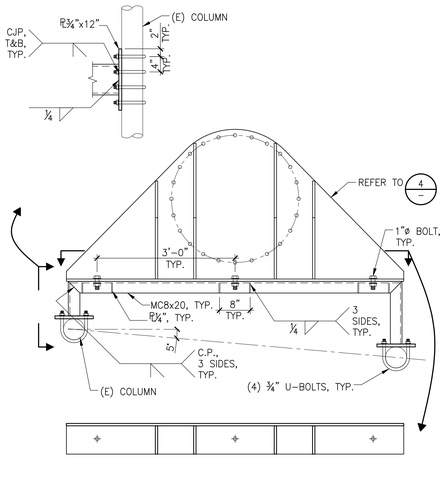

14 TOP AND BOTTOM ANTENNA MOUNT
SCALE: 3/4"=1'-0"

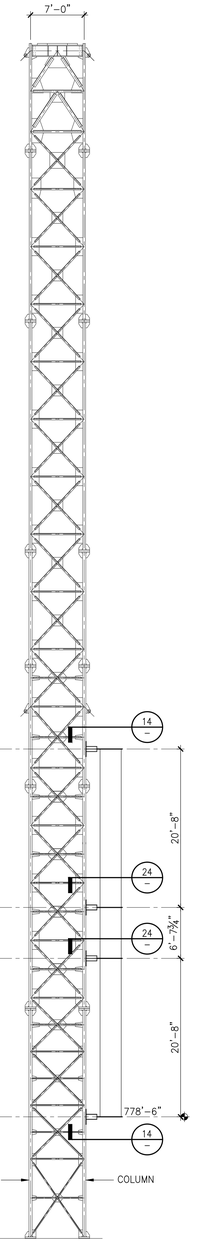

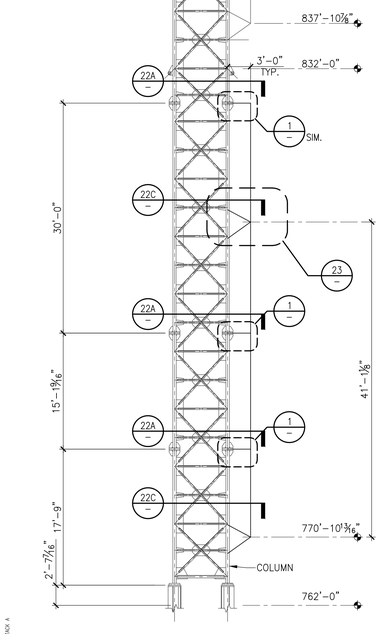

21 ANTENNA MOUNT STACK "A"
SCALE: 1/8"=1'-0"

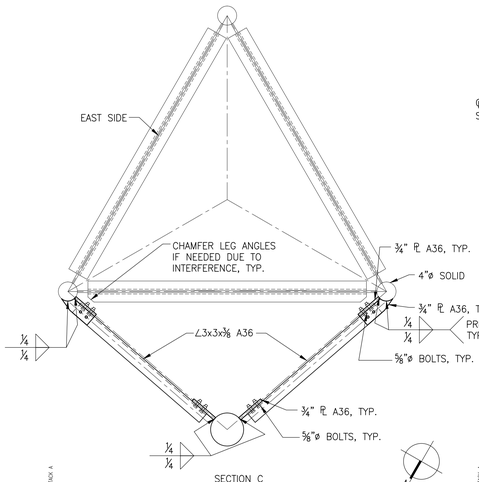

22 SECTIONS ANTENNA STACK "A"
SCALE: 3/4"=1'-0"

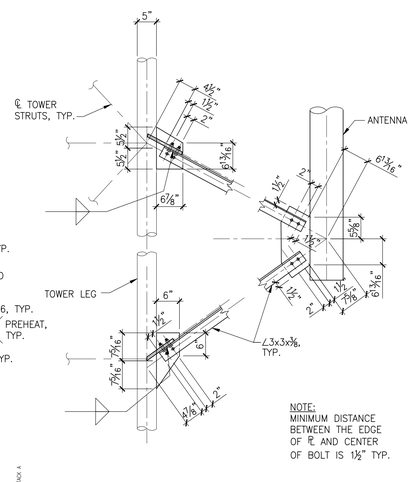

23 DETAIL ANTENNA MOUNT – STACK "A"
SCALE: 3/4"=1'-0"

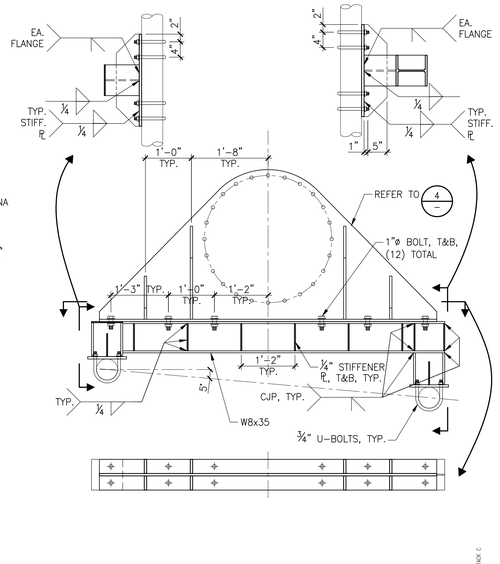

24 MIDDLE ANTENNA MOUNT 2 REQUIRED
SCALE: 3/4"=1'-0"

25 ANTENNA MOUNT STACK "C"
SCALE: 1/8"=1'-0"

SIMPSON GUMPERTZ & HEGER
Engineering of Structures and Building Enclosures

Simpson Gumpertz & Heger Inc.
The Landmark @ One Market, Suite 600
San Francisco, California 94105
415.495.3700 fax: 415.495.3550
www.sgh.com

Boston
Los Angeles
New York
San Francisco
Washington, DC

Consultant

No.	Date	Description	By
0		ISSUED FOR PERMIT	ROH

TOWER ANTENNA ADDITIONS
SUTRO TOWER
1 LA AVANZADA ST
SAN FRANCISCO
CALIFORNIA
94131
Project

ANTENNA MOUNTS STACKS "A" "B" & "C"
Drawing Title

Commission	Checked	Date
067199.06	BW	09/26/11
Drawn	Approved	Scale
GV	ROH	AS NOTED

REGISTERED PROFESSIONAL ENGINEER
RONALD O. HAMBURGER
No. 2951
STRUCTURAL
STATE OF CALIFORNIA
Seal

Drawing No.
S3.2

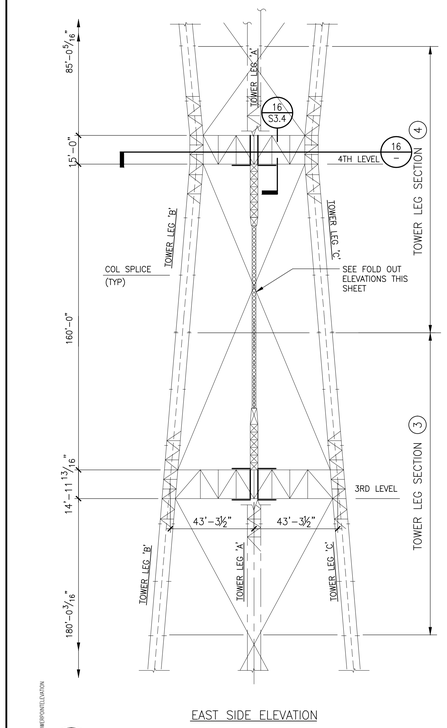

EAST SIDE ELEVATION

11 TOWER WORK POINT ELEVATION
SCALE: 1/32"=1'-0"

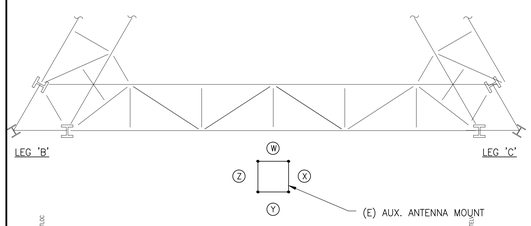

16 AUXILIARY ANTENNA LOCATION
SCALE: 1/8"=1'-0"

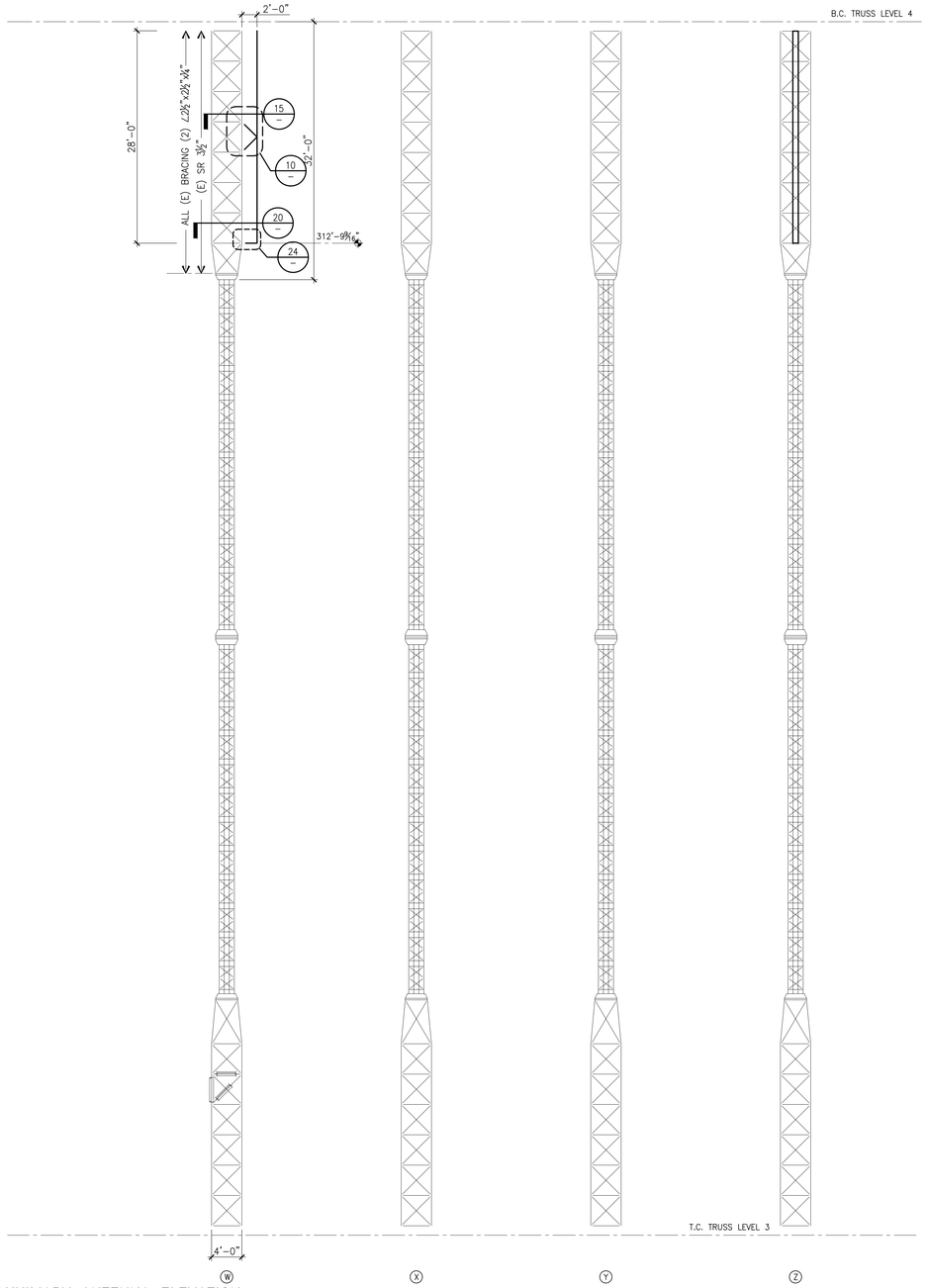

17 AUXILIARY ANTENNA ELEVATION
SCALE: 1/8"=1'-0"

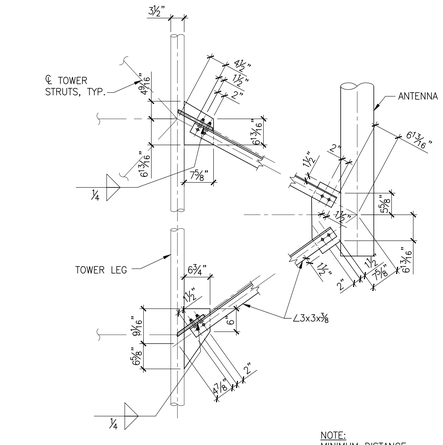

NOTE:
MINIMUM DISTANCE BETWEEN THE EDGE OF PL AND CENTER OF BOLT IS 1½" TYP.

10 DETAIL
ANTENNA MOUNT – STACK "A" SCALE: 3/4"=1'-0"

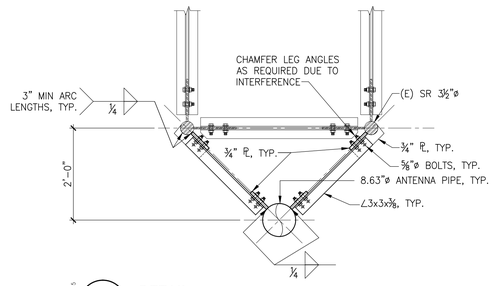

15 DETAIL
SCALE: 3/4"=1'-0"

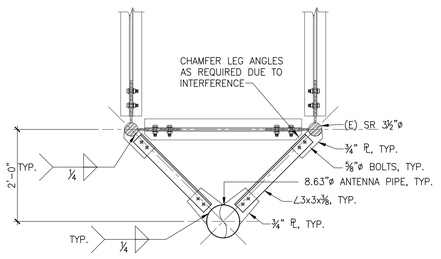

20 DETAIL
SCALE: 3/4"=1'-0"

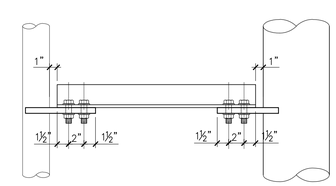

25 DETAIL
SCALE: 1 1/2"=1'-0"

SIMPSON GUMPERTZ & HEGER
Engineering of Structures and Building Enclosures

Simpson Gumpertz & Heger Inc.
The Landmark @ One Market, Suite 600
San Francisco, California 94105
415.495.3700 fax: 415.495.3550
www.sgh.com

Boston
Los Angeles
New York
San Francisco
Washington, DC

Consultant

No.	Date	Description	By
0		ISSUED FOR PERMIT	ROH

TOWER ANTENNA ADDITIONS SUTRO TOWER
1 LA AVANZADA ST
SAN FRANCISCO
CALIFORNIA
94131

Project

NDTV AUXILIARY ANTENNA ELEVATION & SECTIONS

Drawing Title

Commission	Checked	Date
067199.06	BW	09/26/11
Drawn	Approved	Scale
GV	ROH	AS NOTED

REGISTERED PROFESSIONAL ENGINEER
RONALD O. HAMBURGER
No. 2951
STRUCTURAL
STATE OF CALIFORNIA

Seal

Drawing No.
S3.3

1

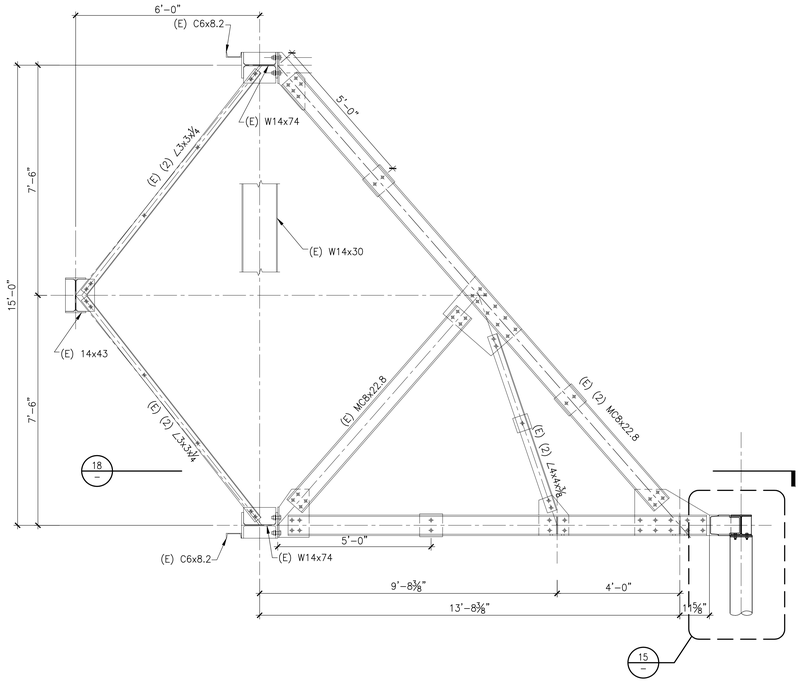

16 DTV TOP MOUNT ELEVATION

SCALE: 1/2"=1'-0"

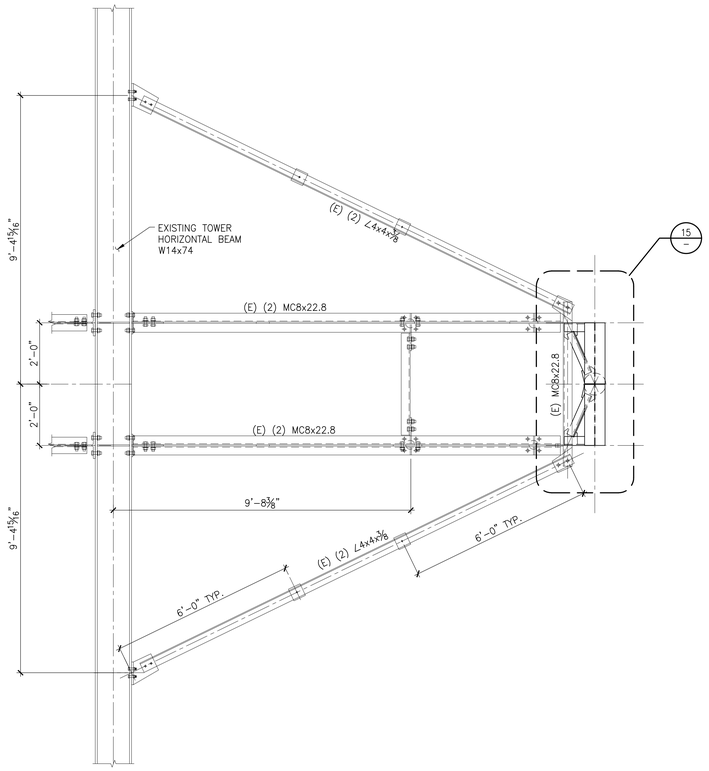

18 DTV TOP MOUNT ELEVATION

SCALE: 1/2"=1'-0"

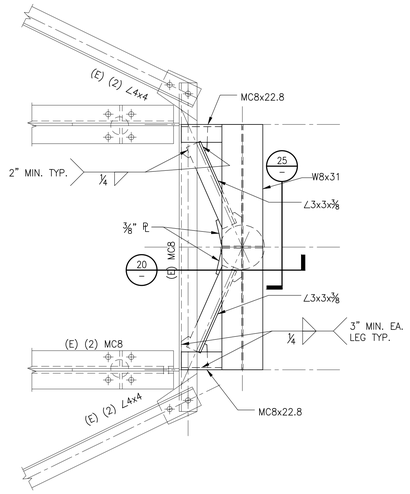

15 DETAIL

SCALE: 1"=1'-0"

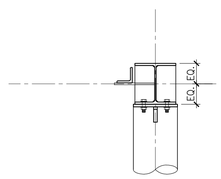

20 DETAIL

SCALE: 1"=1'-0"

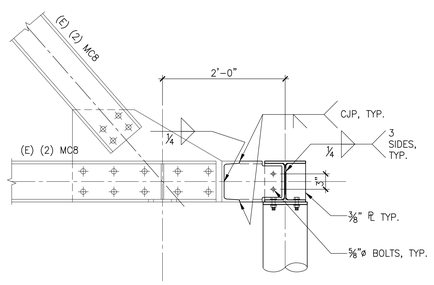

22 DETAIL

SCALE: 1"=1'-0"

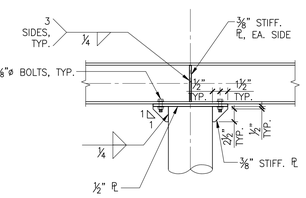

25 DETAIL

SCALE: 1"=1'-0"

SIMPSON GUMPERTZ & HEGER
Engineering of Structures and Building Enclosures

Simpson Gumpertz & Heger Inc.
The Landmark @ One Market, Suite 600
San Francisco, California 94105
415.495.3700 fax: 415.495.3550
www.sgh.com

Boston
Los Angeles
New York
San Francisco
Washington, DC

Consultant

NOTES:
1. BOLTS ARE ¾"ø A490-X (GALV.) U.O.N. W/ (1) ANCO LOCKNUT AND (1) STANDARD WASHER EACH.

No.	Date	Description	By
0		ISSUED FOR PERMIT	ROH

TOWER ANTENNA ADDITIONS SUTRO TOWER
1 LA AVANZADA ST
SAN FRANCISCO
CALIFORNIA
94131

Project

AUXILIARY ANTENNA TOP MOUNT LEVEL 4 DETAILS

Drawing Title

Commission	Checked	Date
067199.06	BW	09/26/11
Drawn	Approved	Scale
GV	ROH	AS NOTED

REGISTERED PROFESSIONAL ENGINEER
RONALD O. HAMBURGER
No. 2951
STRUCTURAL
STATE OF CALIFORNIA

Seal

Drawing No.

S3.4

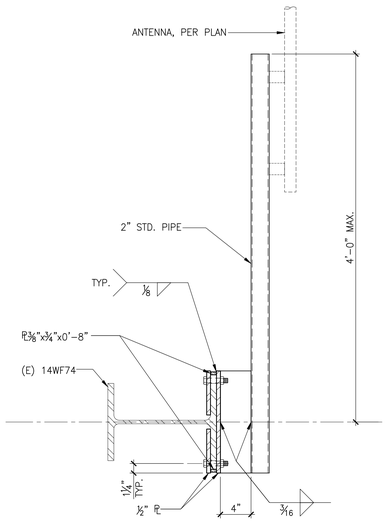

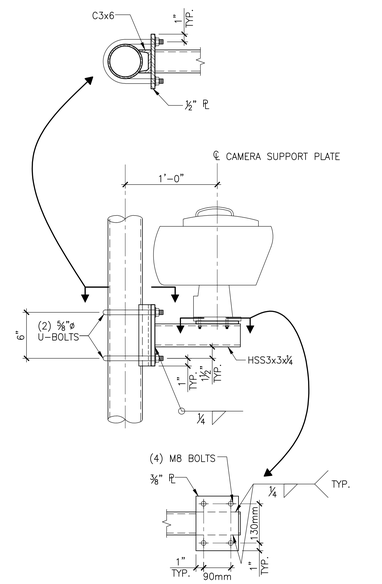

7 CAMERA CONNECTION

SCALE: 1 1/2"=1'-0"

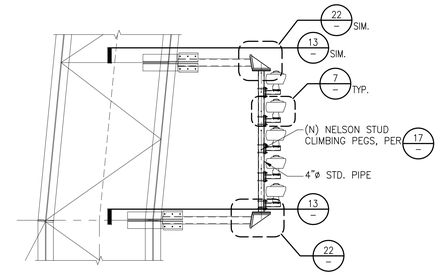

4 ENLARGED ELEVATION

SCALE: 1/4"=1'-0"

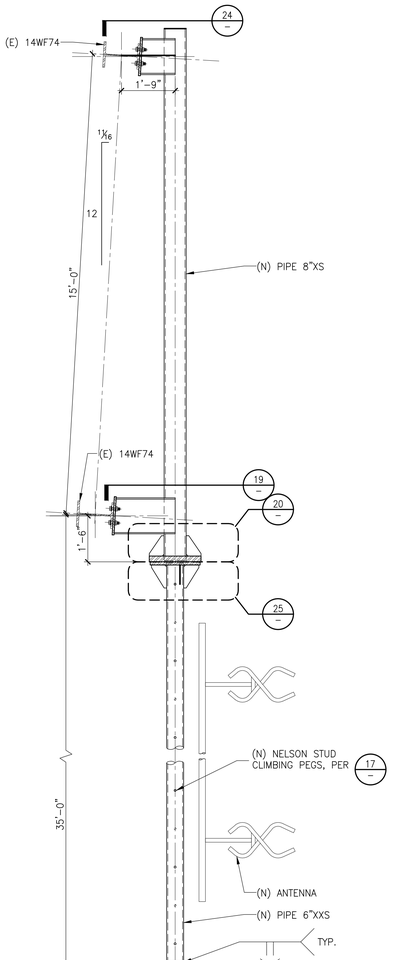

15 ELEVATION

SCALE: 1/2"=1'-0"

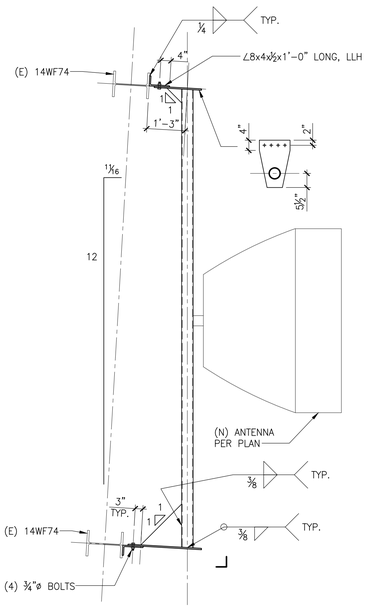

14 ELEVATION

SCALE: 1/2"=1'-0"

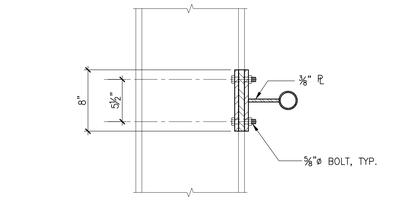

11 DETAIL

SCALE: 1 1/2"=1'-0"

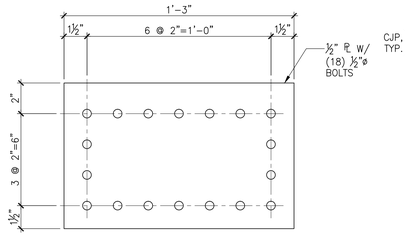

12 CONNECTION PLATE

SCALE: 3"=1'-0"

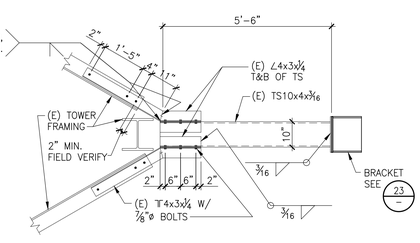

13 PLAN VIEW

SCALE: 1/2"=1'-0"

19 DETAIL

SCALE: 3/4"=1'-0"

20 DETAIL

SCALE: 3/4"=1'-0"

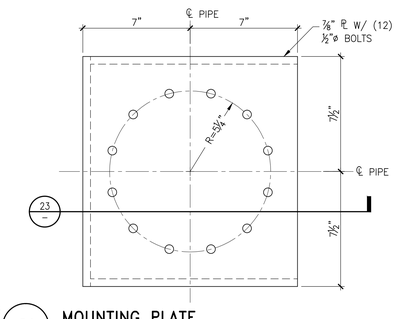

21 MOUNTING PLATE

SCALE: 3"=1'-0"

18 SIDE ELEVATION

SCALE: 1/2"=1'-0"

19 DETAIL

SCALE: 3/4"=1'-0"

20 DETAIL

SCALE: 3/4"=1'-0"

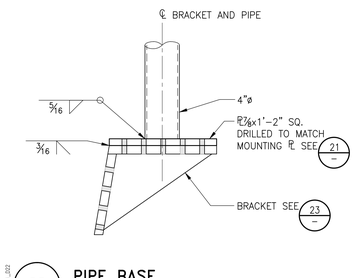

22 PIPE BASE

SCALE: 1 1/2"=1'-0"

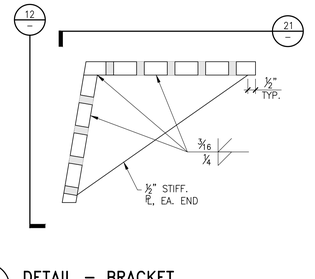

23 DETAIL – BRACKET

SCALE: 3"=1'-0"

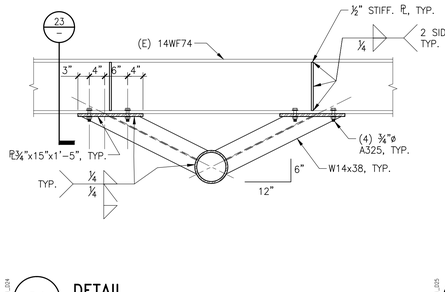

24 DETAIL

SCALE: 3/4"=1'-0"

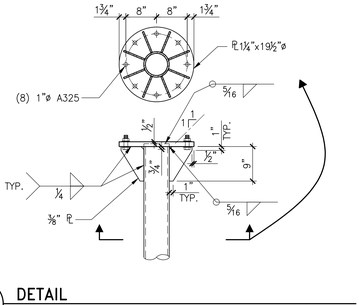

25 DETAIL

SCALE: 3/4"=1'-0"

SIMPSON GUMPERTZ & HEGER

Engineering of Structures and Building Enclosures

Simpson Gumpertz & Heger Inc.
The Landmark @ One Market, Suite 600
San Francisco, California 94105
415.495.3700 fax: 415.495.3550
www.sgh.com

Boston
Los Angeles
New York
San Francisco
Washington, DC

Consultant

No.	Date	Description	By
0		ISSUED FOR PERMIT	ROH

TOWER ANTENNA ADDITIONS
SUTRO TOWER
1 LA AVANZADA ST
SAN FRANCISCO
CALIFORNIA
94131

Project

DETAILS

Drawing Title

Commission	Checked	Date
067199.06	BW	09/26/11
Drawn	Approved	Scale
GV	ROH	AS NOTED

REGISTERED PROFESSIONAL ENGINEER
RONALD D. HAMBURGER
No. 2951
STRUCTURAL
STATE OF CALIFORNIA

Seal

Drawing No.

S5.1

SITE & EROSION CONTROL IMPROVEMENTS
FOR
SUTRO TOWER

SAN FRANCISCO

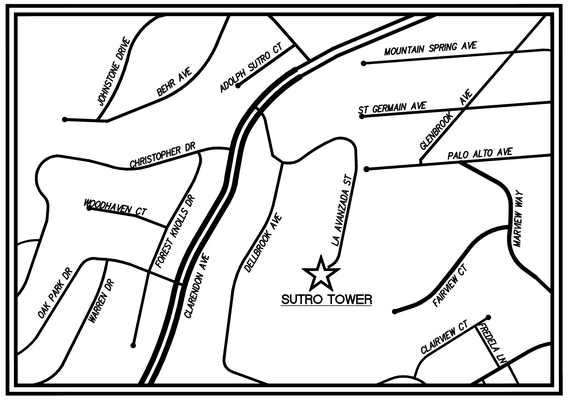

SITE MAP
NTS

CALIFORNIA



VICINITY MAP
NOT TO SCALE

CONSTRUCTION NOTES

1. ALL CONSTRUCTION MATERIALS AND METHODS SHALL COMPLY WITH THE PROJECT DRAWINGS AND SPECIFICATIONS, THE LATEST EDITION OF THE STATE OF CALIFORNIA STANDARD SPECIFICATIONS AND CITY OF SAN FRANCISCO STANDARDS.
2. THE CONTRACTOR SHALL CONFORM TO THE RULES AND REGULATIONS OF THE STATE CONSTRUCTION SAFETY ORDINANCE PERTAINING TO EXCAVATIONS AND TRENCHES.
3. CONTRACTOR SHALL NOTIFY THE OWNER AT LEAST FIVE WORKING DAYS PRIOR TO COMMENCEMENT OF WORK OR IF WORK HAS BEEN SUSPENDED FOR A PERIOD OF MORE THAN THREE DAYS.
4. CONTRACTOR SHALL POST ON THE SITE, EMERGENCY TELEPHONE NUMBERS FOR CONSTRUCTION MANAGER, AMBULANCE, POLICE, AND FIRE DEPARTMENTS.
5. CONTRACTOR AGREES THAT HE SHALL ASSUME SOLE AND COMPLETE RESPONSIBILITY FOR JOB SITE CONDITIONS DURING THE COURSE OF CONSTRUCTION OF THIS PROJECT, INCLUDING SAFETY OF ALL PERSONS AND PROPERTY; THAT THIS REQUIREMENT SHALL APPLY CONTINUOUSLY AND NOT BE LIMITED TO NORMAL WORKING HOURS, AND THAT THE CONTRACTOR SHALL DEFEND, INDEMNIFY AND HOLD THE ENGINEER HARMLESS FROM ANY AND ALL LIABILITY, REAL OR ALLEGED, IN CONNECTION WITH THE PERFORMANCE OF WORK ON THIS PROJECT, EXCEPTING FOR LIABILITY ARISING FROM THE SOLE NEGLIGENCE OF THE ENGINEER.
6. CONTRACTOR SHALL NOTIFY ALL PUBLIC OR PRIVATE UTILITY OWNERS 48 HOURS PRIOR TO COMMENCEMENT OF WORK ADJACENT TO THE UTILITY UNLESS AN EXCAVATION PERMIT SPECIFIES OTHERWISE.
7. UTILITIES AND UNDERGROUND FACILITIES INDICATED ARE FOR INFORMATION ONLY. IT IS THE CONTRACTOR'S RESPONSIBILITY TO PHYSICALLY VERIFY THE LOCATION AND DEPTH AND VERIFY FINDINGS WITH THE APPROPRIATE AGENCIES. THE ENGINEER DOES NOT ASSUME RESPONSIBILITY THAT THE UTILITIES AND UNDERGROUND FACILITIES INDICATED WILL BE THE UTILITIES AND UNDERGROUND FACILITIES ENCOUNTERED.
8. CONTRACTOR TO RESET ALL MANHOLE RIMS AND VALVE BOXES TO GRADE AFTER PLACING THE BASE AND IMMEDIATELY PRIOR TO THE LAST LIFT OF PAVING.
9. CONTRACTOR TO PROVIDE UNDERGROUND LOCATING SERVICE TO HAVE THE LOCATION OF EXISTING UNDERGROUND UTILITIES MARKED. IT SHALL BE THE RESPONSIBILITY OF THE CONTRACTOR TO IDENTIFY, LOCATE, AND PROTECT ALL UNDERGROUND FACILITIES PRIOR TO ANY CONSTRUCTION.
10. THE CONTRACTOR SHALL BE RESPONSIBLE TO PROVIDE AMPLE COVER FOR THE PROTECTION OF ALL INSTALLED UTILITIES DURING THE CONSTRUCTION OF THE PROJECT.
11. THE CONTRACTOR IS RESPONSIBLE FOR COORDINATING ALL NECESSARY UTILITY RELOCATIONS, IF REQUIRED.
12. ANY EXISTING UTILITY TO BE EXTENDED OR INTO WHICH PROPOSED UTILITIES ARE TO BE CONNECTED SHALL BE EXPOSED BY THE CONTRACTOR PRIOR TO THE STAKING OF THE EXTENSION OF SUCH UTILITIES. THE CONTRACTOR SHALL THEN MEASURE THE EXISTING LOCATION AND ELEVATION FOR POSSIBLE CONFLICTS OR OTHER INCONSISTENCIES WITH PLANS. IF THESE MEASUREMENTS REVEAL CONFLICTS OR OTHER INCONSISTENCIES WITH THE PLANS, THE CONTRACTOR SHALL NOTIFY THE ENGINEER AND REQUEST DESIGN OR OTHER MODIFICATIONS TO RESOLVE THE CONFLICT OR INCONSISTENCIES.
13. THE CONTRACTOR SHALL EXPOSE EXISTING UTILITIES INCLUDING DRAIN LINES AT CROSSINGS OF EXISTING AND PROPOSED UTILITIES AND PRIOR TO THE STAKING OF THE PROPOSED UTILITIES PRIOR TO ANY EXCAVATION FOR PROPOSED UTILITY INSTALLATION. CONTRACTOR SHALL MEASURE THE ELEVATION OF THE EXISTING UTILITIES AND CHECK FOR CONFLICTS WITH THE PROPOSED UTILITIES. IF A GRADE CONFLICT DOES OCCUR, THE CONTRACTOR SHALL INFORM THE ENGINEER. THE ENGINEER SHALL MAKE ANY GRADE ADJUSTMENT NECESSARY TO RESOLVE THE GRADE CONFLICT. NO ADJUSTMENT IN BID PRICES WILL BE ALLOWED AS A RESULT OF SUCH GRADE ADJUSTMENT.
14. CONTRACTOR SHALL EXPOSE END OF EXISTING SEWER AND DRAIN PIPES OR STRUCTURES AND VERIFY LOCATION AND ELEVATION PRIOR TO PLACEMENT OF PIPE. IF A GRADE CONFLICT DOES OCCUR, THE CONTRACTOR SHALL INFORM THE ENGINEER. THE ENGINEER SHALL MAKE ANY GRADE ADJUSTMENT NECESSARY TO RESOLVE THE GRADE CONFLICT. NO ADJUSTMENT IN BID PRICES WILL BE ALLOWED AS A RESULT OF SUCH GRADE ADJUSTMENTS. ALL COSTS OF SUCH EXCAVATION AND BACKFILL SHALL BE INCLUDED IN PRICE PAID FOR VARIOUS ITEMS OF WORK.
15. ANY EXISTING UTILITY STRUCTURE INCLUDING BUT NOT LIMITED TO VALVE BOXES, SEWER AND STORM MANHOLES AND INLETS, ELECTRICAL, WATER, GAS AND TELEPHONE BOXES AND VAULTS OCCURRING IN THE LOCATION OF PROPOSED IMPROVEMENTS SHALL BE RESET TO THE PROPER GRADE. PAYMENT FOR SUCH RESETTINGS SHALL BE INCLUDED IN OTHER ITEMS OF WORK AND NO ADDITIONAL COMPENSATION SHALL BE ALLOWED THEREFORE.
16. ALL CONSTRUCTION ACTIVITIES SHALL BE PERFORMED IN SUCH A MANNER AS TO COMPLY WITH THE STANDARDS ESTABLISHED BY THE AIR QUALITY MAINTENANCE DISTRICT FOR AIRBORNE PARTICULATE (DUST).
17. ALL MATERIALS SHALL BE FURNISHED AND INSTALLED BY THE CONTRACTOR UNLESS OTHERWISE NOTED.

CONSTRUCTION NOTES (CONTINUED)

18. THE CONTRACTOR SHALL PROVIDE ALL LIGHTS, SIGNS, BARRICADES, FLAG MEN OR OTHER DEVICES NECESSARY TO PROVIDE FOR PUBLIC SAFETY AT ALL WORK LOCATIONS.
19. CONTRACTOR SHALL BE RESPONSIBLE TO REPAIR OR REPLACE ANY EXISTING IMPROVEMENTS OR UNDERGROUND FACILITIES DAMAGED BY HIM, HIS SUBCONTRACTORS OR HIS MATERIAL SUPPLIERS.
20. ALL CONCRETE SHALL COMPLY TO SECTION 90 OF THE CALTRANS STANDARD SPECIFICATIONS.
21. REVISED PLANS SHALL BE SUBMITTED TO AND APPROVED BY THE ENGINEER BEFORE ANY DEVIATIONS FROM THE APPROVED PLANS ARE MADE IN THE FIELD.
22. IT IS THE CONTRACTOR'S RESPONSIBILITY TO VERIFY EXISTING GRADES PRIOR TO CONSTRUCTION.
23. ALL UNDERGROUND UTILITIES SHALL BE COMPLETE BEFORE PLACING OF BASE ROCK UNLESS OTHERWISE NOTED.
24. THE CONTRACTOR IS RESPONSIBLE FOR MATCHING EXISTING STREETS, SURROUNDING LANDSCAPE AND OTHER IMPROVEMENTS WITH A SMOOTH TRANSITION IN PAVING, CURBS, GUTTERS, SIDEWALKS, GRADING, ETC., AND TO AVOID ANY ABRUPT OR APPARENT CHANGES IN GRADES OR CROSS SLOPES, LOW SPOTS OR HAZARDOUS CONDITIONS.
25. GRADE BREAKS TO BE ROUNDED OFF IN CONCRETE FORM WORK AND FINISH SURFACING.
26. EXPORT SPOIL MATERIALS, IF ANY, RESULTING FROM THE GRADING OF THIS PROJECT SHALL BE DISPOSED OF PROPERLY AT LOCATION DETERMINED BY THE CONTRACTOR AND APPROVED BY THE CITY.
27. A.C. SURFACE SHALL BE CUT TO A NEAT STRAIGHT LINE AND THE EXPOSED EDGE SHALL BE TACKED WITH EMULSION PRIOR TO PAVING. THE EXPOSED BASE MATERIAL SHALL BE GRADED, RECOMPACTED AND RESEALED PRIOR TO PAVING. MONUMENTS AND ANY MONUMENTS OBLITERATED OR DAMAGED DURING CONSTRUCTION WILL BE REPLACED AT THE CONTRACTOR'S EXPENSE.
28. THE CONTRACTOR SHALL BE RESPONSIBLE FOR PRESERVING ALL EXISTING SURVEY MONUMENTS.
29. THE CONTRACTOR SHALL REVIEW THE PLANS AND MAKE HIS OWN ASSESSMENT OF EARTHWORK BALANCE, EXCESS OR SHORTAGE. HE SHALL PREPARE HIS BID SO AS TO INCLUDE ANY EXCESS WHICH MAY OCCUR AND AS TO AVAILABLE SPOIL SITE IN THE EVENT OF AN EXCESS, AND AS TO AVAILABLE MATERIAL SOURCES IN THE EVENT OF A SHORTAGE. SHOULD THERE BE AN EXCESS OF MATERIAL, THE CONTRACTOR SHALL NOT DEPOSIT MATERIAL IN ANY NATURAL STREAMS, WETLANDS, VERNAL POOLS, OR WITHIN THE 100 YEAR FLOOD PLAIN. HIS BID SHALL INCLUDE ALL HAULING COSTS IF HAULING IS NECESSARY. NO ADDITIONAL COMPENSATION WILL BE ALLOWED DUE TO PROJECT EARTHWORK EXCESS OR SHORTAGE.

UNDERGROUND UTILITY NOTE

THE TYPES, LOCATIONS, SIZES AND/OR DEPTHS OF EXISTING UNDERGROUND UTILITIES AS SHOWN ON THIS TOPOGRAPHIC SURVEY ARE APPROXIMATE AND WERE OBTAINED FROM SOURCES OF VARYING RELIABILITY. ONLY ACTUAL EXCAVATION WILL REVEAL THE TYPES, EXTENT, SIZES, LOCATIONS AND DEPTHS OF SUCH UNDERGROUND UTILITIES. A REASONABLE EFFORT HAS BEEN MADE TO LOCATE AND DELINEATE ALL KNOWN UNDERGROUND UTILITIES. HOWEVER, THE ENGINEER CAN ASSUME NO RESPONSIBILITY FOR THE COMPLETENESS OR ACCURACY OF ITS DELINEATION OF SUCH UNDERGROUND UTILITIES WHICH MAY BE ENCOUNTERED, BUT WHICH ARE NOT SHOWN ON THIS SURVEY.

EARTHWORK FOR CONSTRUCTION NOTE

IT SHALL BE THE CONTRACTOR'S RESPONSIBILITY TO INCLUDE ALL MATERIAL AND LABOR REQUIRED WITHIN THE BID PRICE, FOR EARTHWORK CONSTRUCTION, TO CARRY OUT THE CUT/FILL AND/OR IMPORT/EXPORT AS NECESSARY TO MEET THE DESIGN GRADES SHOWN ON THE PLANS. SUBCONTRACTOR IS TO DELIVER TO THE OWNER OF THE PROJECT IN A COMPLETE AND OPERATIONAL MANNER. EARTHWORK QUANTITIES SHOWN ON THE PLANS OR REPRESENTED BY THE ENGINEER ARE APPROXIMATE AND ARE FOR GRADING PERMIT APPROVAL ONLY. THE SUBCONTRACTOR IS RESPONSIBLE FOR ANY INVESTIGATION OR STUDIES THAT ARE REQUIRED BY THE SUBCONTRACTOR TO SATISFY THIS REQUIREMENT. NO ADDITIONAL COMPENSATION SHALL BE PAID FOR SAID CUT/FILL AND/OR IMPORT/EXPORT.

DISCREPANCIES

IF THERE ARE ANY DISCREPANCIES BETWEEN THE CONSTRUCTION DOCUMENTS AND EXISTING CONDITIONS WHICH WILL AFFECT THE WORK, THE SUBCONTRACTOR SHALL BRING SUCH DISCREPANCIES TO THE ATTENTION OF THE ENGINEER FOR ADJUSTMENT BEFORE PROCEEDING WITH THE WORK. THE SUBCONTRACTOR SHALL BE RESPONSIBLE FOR THE PROPER FITTING OF ALL WORK AND FOR THE COORDINATION OF ALL TRADES, SUBCONTRACTORS, AND PERSONS ENGAGED UPON THIS CONTRACT.

LEGEND

	EXISTING	PROPOSED
PUBLIC EASEMENT LINE		
BOUNDARY LINE		
CONC. VALLEY GUTTER		
CONC. SIDEWALK OR PAD		
ASPHALT CONCRETE		
SAWCUT AND CONFORM		
6" CURB & GUTTER		
FLUSH CURB		
6" VERTICAL CURB		
CENTER LINE		
STORM SEWER MAIN	8" SS	SS
STORM DRAIN MAIN	12" SD	SD
WATER MAIN	6" W	W
FIRE WATER	FW	FW
SILT FENCE		
CHAIN LINK FENCE	x x	x x
GAS MAIN	G	G
CAP AND PLUG END		
ELECTRIC AND SIGNAL DUCT BANK	E	E
STEAM LINE	ST	
STREET LIGHT CONDUIT	SL	
CONTOUR ELEVATION LINE	85	90
SPOT ELEVATION	x 95.94	95.5
DIRECTION OF SLOPE		1%
WATER METER	W	WM
WATER VALVE	WV	WV
SIGN		
HANDICAP RAMP		
CONCRETE THRUST BLOCK		
SANITARY SEWER MANHOLE		
SANITARY SEWER CLEANOUT	SSCO	
STORM SEWER MANHOLE		
STORM SEWER AREA DRAIN		
STORM SEWER CURB INLET	CB	
STORM SEWER CLEANOUT	SDCO	
ELECTROLIER		
DOWNSPOUT		DS

TOPOGRAPHIC AND BOUNDARY NOTE

1. PREPARED BY TRONOFF ASSOCIATES LAND SURVEYORS DATED JULY 23, 2012. APPROVED BY BRUCE T. TRONOFF, LAND SURVEYOR NO. 6415
2. SUPP-TOPO PREPARED BY SANDIS DATED OCTOBER 11, 2012. APPROVED BY LAURA J. CABRAL, LAND SURVEYOR NO. 7756

GEOTECHNICAL INVESTIGATION

A GEOTECHINICAL LETTER HAS BEEN PREPARED FOR THE ROADWAY PORTION OF THIS PROJECT BY TREADWELL & ROLLO ON NOVEMBER 8, 2012, PROJ. NO. 731602401

ABBREVIATIONS

AB	– AGGREGATE BASE		HP	– HIGH POINT	
AC	– ASPHALTIC CONCRETE		INV	– INVERT ELEVATION	
AD	– AREA DRAIN		JP	– JOINT POLE	
AS	– AGGREGATE SUBBASE		MAX	– MAXIMUM	
BC	– BEGINNING OF CURVE		MIN	– MINIMUM	
BFP	– BACK FLOW PREVENTOR		MPVC	– MIDPOINT OF VERTICAL CURVE	
BLDC	– BUILDING CORNER		MH	– MANHOLE	
BLDL	– BUILDING LINE		N	– NORTH	
BOW	– BOTTOM OF WALL		NO	– NUMBER	
BS	– BOTTOM OF STEP		NTS	– NOT TO SCALE	
BVC	– BEGIN VERTICAL CURVE		P	– PAVEMENT ELEVATION	
BW	– BACK OF WALK		PCC	– PORTLAND CEMENT CONCRETE	
C	– CONCRETE		PIV	– POST INDICATOR VALVE	
CY	– CUBIC YARD		PL	– PROPERTY LINE	
CB	– CATCH BASIN		PMH	– POWER MANHOLE	
C&G	– CURB AND GUTTER		PP	– POWER POLE	
CI	– CURB INLET		PVC	– POLYVINYL CHLORIDE PIPE	
CIP	– CAST IRON PIPE		R	– RADIUS	
CL	– CENTER LINE OR CLASS		RC	– RELATIVE COMPACTION	
CO	– CLEANOUT		RCP	– REINFORCED CONCRETE PIPE	
CMP	– CORRUGATED METAL PIPE		R/W	– RIGHT OF WAY	
CONC	– CONCRETE		RWL	– RAIN WATER LEADER	
CONST	– CONSTRUCTION OR CONSTRUCT		S/W	– SIDEWALK	
DI	– DROP INLET		S	– SLOPE OR SOUTH	
DIP	– DUCTILE IRON PIPE		S.A.D.	– SEE ARCHITECT DRAWINGS	
DOM	– DOMESTIC		SG	– SUB GRADE	
DS	– DOWNSPOUT		SOG	– STAIRS ON GRADE	
DW	– DOMESTIC WATER		S.S.D.	– SEE STRUCTURAL DRAWINGS	
DWG	– DRAWING		S.L.D.	– SEE LANDSCAPE DRAWINGS	
E	– EAST		S.E.D.	– SEE ELECTRICAL DRAWINGS	
EC	– END OF CURVE		SB	– SEDIMENT BASIN	
EP	– EDGE OF PAVEMENT		SD	– STORM DRAIN	
ER	– END OF RETURN		SF	– SILT FENCE	
EVC	– END VERTICAL CURVE		SG	– SUB GRADE	
ELEV	– ELEVATION		SMH	– SIGNAL MANHOLE	
EX–EXIST	– EXISTING		SS	– SANITARY SEWER	
FC	– FLUSH CURB		STA	– STATION	
FDC	– FIRE DEPARTMENT CONNECTION		STD	– STANDARD	
FF	– FINISHED FLOOR		TYP	– TYPICAL	
FG	– FINISHED GRADE		TC	– TOP OF CURB	
FH	– FIRE HYDRANT		TS	– TOP OF STEP	
FL	– FLOW LINE		TOB	– TOP OF BERM	
FOUND	– FOUNDATION		TOW	– TOP OF WALL	
FS	– FINISHED SURFACE		U/G	– UNDERGROUND	
FT	– FOOT		UON	– UNLESS OTHERWISE NOTED	
FW	– FIRE WATER		VC	– VERTICAL CURVE	
G	– GROUND		W/	– WITH	
GB	– GRADE BREAK		WM	– WATER METER	
GRDR	– GUARD RAIL		WV	– WATER VALVE	
GV	– GATE VALVE		W	– WEST	
HC	– HANDICAP		WWF	– WELDED WIRE FABRIC	

TOPOGRAPHIC SYMBOLS

SYMBOLS

- BUILDING LINE
- FENCE
- PROPERTY LINE
- DIMENSION POINT

UTILITY SYMBOLS

- ELECTRIC BOX
- ELECTRIC CONNECTION BOX
- ELECTRIC SWITCH BOX
- HEATING, VENTILATION AND AIR CONDITIONING UNIT
- HIGH VOLTAGE VAULT
- MOTION DETECTOR

SHEET INDEX

C–1.0	COVER SHEET
C–2.0	SITE TOPOGRAPHIC SURVEY
C–2.1	ROADWAY TOPOGRAPHIC SURVEY
C–3.0	SITE DEMOLITION PLAN
C–3.1	ROADWAY DEMOLITION PLAN
C–4.0	SITE GRADING AND DRAINAGE PLAN
C–4.1	ROADWAY GRADING AND DRAINAGE PLAN
C–5.0	UTILITY PLAN
C–6.0	CONSTRUCTION DETAILS
C–6.1	CONSTRUCTION DETAILS
C–7.0	SITE TEMPORARY EROSION CONTROL PLAN
C–7.1	ROADWAY TEMPORARY EROSION CONTROL PLAN
C–7.2	EROSION CONTROL DETAILS
C–8.0	STRIPING PLA

UNAUTHORIZED CHANGES AND USES

CAUTION: The engineer preparing these plans will not be responsible for, or liable for, unauthorized changes to or uses of these plans. All changes to the plans must be in writing and must be approved by the preparer of the plans.

SIMPSON GUMPERTZ & HEGER
Engineering of Structures and Building Enclosures

Simpson Gumpertz & Heger Inc.
The Landmark @ One Market, Suite 600
San Francisco, California 94105
415.495.3700 fax: 415.495.3500
www.sgh.com

Boston
Los Angeles
New York
San Francisco
Washington, DC

SANDIS
CIVIL ENGINEERS
SURVEYORS
PLANNERS
936 E. Duane Avenue,
Sunnyvale, Ca. 94085
P. 408.636.0900
F. 408.636.0999
www.sandis.net
SUNNYVALE - ROSEVILLE - OAKLAND

DATE FEBRUARY 15, 2013

KENNETH N. OLCOTT
R.C.E. NO. 51079, EXPIRES 9-30-13

No.	Date	Description	By
0		ISSUED FOR REVIEW	

SITE & EROSION CONTROL IMPROVEMENTS FOR SUTRO TOWER
1 LA AVANZADA ST
SAN FRANCISCO
CALIFORNIA
Project

COVER SHEET
Drawing Title

Commission	Checked	Date
212121	JP	02/15/13
Drawn	Approved	Scale
LW	AT	NO SCALE

Drawing No. **C-1.0**
Seal

MATCHLINE SEE SHEET C-2.1

SCALE: 1"=10'

S 60°28'34" W (D&M) 257.097' (M) 257.000' (D)

N 29°31'26" W (D&M) 112' (D)

SIMPSON GUMPERTZ & HEGER
Engineering of Structures and Building Enclosures

Simpson Gumpertz & Heger Inc.
The Landmark @ One Market, Suite 600
San Francisco, California 94105
415.495.3700 fax: 415.495.3590
www.sgh.com

Boston
Los Angeles
New York
San Francisco
Washington, DC

SANDIS
CIVIL ENGINEERS
SURVEYORS
PLANNERS

936 E. Duane Avenue,
Sunnyvale, Ca. 94085
P. 408.636.0900
F. 408.636.0999
www.sandis.net

DATE FEBRUARY 15, 2013

KENNETH N. OLCOTT
R.C.E. NO. 51079, EXPIRES 9-30-13

No.	Date	Description	By
0		ISSUED FOR REVIEW	

SITE & EROSION CONTROL IMPROVEMENTS FOR SUTRO TOWER

1 LA AVANZADA ST
SAN FRANCISCO
CALIFORNIA

Project

SITE TOPOGRAPHIC SURVEY

Drawing Title

Commission	Checked	Date
212121	JP	02/15/13
Drawn	Approved	Scale
LW	AT	1"=10'

Drawing No.

C-2.0

Seal

File: X:\P\212121\ENG\CONTRACT\C-2.0_TOPO.dwg Date:Feb 14, 2013 - 4:42pm, tdavis

SCALE: 1"=20'

MIDTOWN TERRACE SUBD. NO. 7
'S' MAPS 21, 08/20/1958
AB 2781

CITY OF SAN FRANCISCO
(PARCEL 'B', 'S' MAPS 24, 12/16/1958)

CITY OF SAN FRANCISCO
SUMMIT RESERVOIR SITE
AB 2719 C

FOOTPATH

MATCHLINE SEE SHEET C-2.0

SSDB RIM 712.83
INV. 12" OUT (NE) 707.73

SSMH RIM 713.09
INV. 12" IN (SW) 708.74
INV. 12" IN (SE) 708.74
INV. 12" IN (SE) 706.64
INV. 8" IN (S) 704.80
INV. 12" OUT (N) 704.80

SSMH RIM 709.71
INV. 12" THRU (S-N) 700.31

SSDB RIM 713.73
INV. 12" OUT (NE) 708.43

SIMPSON GUMPERTZ & HEGER
Engineering of Structures and Building Enclosures

Simpson Gumpertz & Heger Inc.
The Landmark @ One Market, Suite 600
San Francisco, California 94105
415.495.3700 fax: 415.495.3590
www.sgh.com

Boston
Los Angeles
New York
San Francisco
Washington, DC

SANDIS
CIVIL ENGINEERS
SURVEYORS
PLANNERS

936 E. Duane Avenue,
Sunnyvale, Ca. 94085
P. 408.636.0900
F. 408.636.0999
www.sandis.net

SUNNYVALE - ROSEVILLE - OAKLAND

DATE FEBRUARY 15, 2013

KENNETH N. OLCOTT
R.C.E. NO. 51079, EXPIRES 9-30-13

No.	Date	Description	By
0		ISSUED FOR REVIEW	

SITE & EROSION CONTROL IMPROVEMENTS FOR SUTRO TOWER

1 LA AVANZADA ST
SAN FRANCISCO
CALIFORNIA

Project

ROADWAY TOPOGRAPHIC SURVEY

Drawing Title

Commission	Checked	Date
212121	JP	02/15/13
Drawn	Approved	Scale
LW	AT	1"=20'

Drawing No.

C-2.1

Seal

File: X:\P\212121\ENG\CONTRACT\C-2.1_RD-TOPO.dwg Date:Feb 14, 2013 - 4:42pm, tdavis

MATCHLINE SEE SHEET C-3.1

SCALE: 1"=10'

PROTECT IN PLACE EX. TREE. MATCH EX. GRADES APPROXIMATELY 20 FEET SOUTH OF TREE.

PROTECT IN PLACE EX. WOOD FENCE.

PROTECT IN PLACE EX. HVAC EQUIPMENT TO REMAIN

RELOCATE EX. HVAC EQUIPMENT AND CONDUIT. COORDINATE WITH OWNER FOR TEMPORARY AIR CONDITIONING.

REMOVE CONCRETE CURB & METAL ENCLOSURE. SALVAGE METAL ENCLOSURE FOR RE-USE

CABLE TRAY & GENERATOR CONDUIT & WIRING ON BUILDING FACE TO BE RELOCATED ABOVE FINISH GRADE

CABLE TRAY & GENERATOR CONDUIT & WIRING ON BUILDING FACE TO BE RELOCATED ABOVE FINISH GRADE

DEMO AND REMOVE EX. CONC.

PROTECT IN PLACE EX. CONCRETE SLAB.

GENERATOR CONDUIT WIRING TO BE RELOCATED ABOVE FINISHED GRADE

DEMO AND REMOVE EX. MOTION DETECTOR AND PULL BOX.

DEMO AND REMOVE EX. WALL

PROTECT IN PLACE EX 4" DRAIN PIPE

CUT EX. PIPE & TIE INTO PROPOSED SD SYSTEM.

PROTECT EX. TREE (TYP)

EX. CONC. PAD TO REMAIN IN PLACE

ONE LA AVANZADA STREET
3 - STORY CONCRETE TRANSMITTER BUILDING

(E) BLDG

CONCRETE

(E) GENERATOR

TRANSFORMERS, HVAC EQUIPMENT AND DUCTING

GENERATOR BUILDING

ASPHALT

S 60°28'34" W (D&M) 257.097' (M) 257.000' (D)

N 29°31'26" W (M&D) 145.836' (M&D)

N 29°30'00" E (M) 112' (D)

DEMOLITION NOTES

1. CONTRACTOR SHALL CUT ALL DEAD TREES AND STUMPS TO FINISH GRADE.
2. ALL EXISTING SITE MOTION DETECTOR ELECTRICAL STRUCTURES, CONDUITS AND WIRING WITHIN PROJECT LIMITS SHALL BE REMOVED AND DISPOSED IN ACCORDANCE WITH LOCAL REGULATIONS.
3. THE CONTRACTOR SHALL PROVIDE LABOR, MATERIAL AND EQUIPMENT REQUIRED FOR DEMOLISHING, CUTTING, CAPPING, REMOVING AND DISPOSING OF EXISTING IMPROVEMENTS AS DESIGNATED AND SHOWN ON THE DRAWINGS AND AS REQUIRED, UNLESS OTHERWISE NOTED.
4. THE CONTRACTOR SHALL SAWCUT EXISTING ASPHALT AND CONCRETE PAVEMENT AND SIDEWALKS AT THE NEAREST CONSTRUCTION JOINT OR SCORE LINE TO PROVIDE FOR PROPOSED CONSTRUCTION.
5. THE CONTRACTOR SHALL DEMOLISH, ABANDON OR REROUTE EXISTING UTILITIES AS REQUIRED FOR PROPOSED CONSTRUCTION. UTILITIES AND APPURTENANCES TO REMAIN WITHIN THE PROJECT LIMIT OF WORK SHALL BE PROTECTED.
6. THE CONTRACTOR SHALL COORDINATE ALL UTILITY SHUT-DOWNS WITH OWNER.
7. PROTECT IN PLACE ALL EX. TREE NOT LABELED TO BE REMOVED. USE TREE PROTECTION MEASURES AS REQUIRED TO COMPLY WITH LOCAL REGULATIONS.

LEGEND

- EX. TREE PROTECTION LOCATION
- REMOVE EXISTING CONCRETE WALK/PAD AND ASSOCIATED BASE MATERIAL
- CUT TREE STUMP FLUSH WITH GRADE & PARALLEL WITH THE SLOPE. COVER STUMP WITH 10 MIL BLACK PLASTIC SHEET AND EXTEND 8" BELOW GRADE & SECURELY STAPLE TO SIDES OF STUMP. BACKFILL & RECOMPACT AS REQUIRED TO RESTORE EXISTING ADJACENT SLOPE (1:1 MAX). THE GRADE CAN BE FILLED TO COVER PLASTIC.
- REMOVE TREE AND CUT TREE STUMP FLUSH WITH GRADE & PARALLEL WITH THE SLOPE. COVER STUMP WITH 10 MIL BLACK PLASTIC SHEET AND EXTEND 8" BELOW GRADE & SECURELY STAPLE TO SIDES OF STUMP. BACKFILL & RECOMPACT AS REQUIRED TO RESTORE EXISTING ADJACENT SLOPE (1:1 MAX). THE GRADE CAN BE FILLED TO COVER PLASTIC. SEE LANDSCAPING PLANS FOR TREE REPLACEMENT SPECIES & LOCATIONS.
- -/////////- DEMOLISH AND REMOVE EXISTING UTILITY
- CLEAR, GRUB, AND GROOM. REMOVE EX. SHREDDED BARK DEBRIS AND DEAD ORGANIC MATERIAL.

File: X:\P\212121\ENG\CONTRACT\C-3.0_DEMO.dwg Date:Feb 14, 2013 - 4:42pm, tdavis

SIMPSON GUMPERTZ & HEGER
Engineering of Structures and Building Enclosures

Simpson Gumpertz & Heger Inc.
The Landmark @ One Market, Suite 600
San Francisco, California 94105
415.495.3700 fax: 415.495.3590
www.sgh.com

Boston
Los Angeles
New York
San Francisco
Washington, DC

SANDIS
CIVIL ENGINEERS
SURVEYORS
PLANNERS
936 E. Duane Avenue,
Sunnyvale, Ca. 94085
P. 408.636.0900
F. 408.636.0999
www.sandis.net
SUNNYVALE - ROSEVILLE - OAKLAND

DATE FEBRUARY 15, 2013

KENNETH N. OLCOTT
R.C.E. NO. 51079, EXPIRES 9-30-13

No.	Date	Description	By
0		ISSUED FOR REVIEW	

SITE & EROSION CONTROL IMPROVEMENTS FOR SUTRO TOWER
1 LA AVANZADA ST SAN FRANCISCO CALIFORNIA

Project

SITE DEMOLITION PLAN

Drawing Title

Commission	Checked	Date
212121	JP	02/15/13
Drawn	Approved	Scale
LW	AT	1"=10'

Drawing No.

C-3.0

Seal

LEGEND

AC PAVEMENT TO BE REMOVED (SAVE AND PROTECT BASE MATERIAL)

CLEAR, GRUB AND GROOM. REMOVE EX. SHREDDED BARK.

REMOVE TREE AND CUT TREE STUMP FLUSH WITH GRADE & PARALLEL WITH THE SLOPE. COVER STUMP WITH 10 MIL BLACK PLASTIC SHEET AND EXTEND 8" BELOW GRADE & SECURELY STAPLE TO SIDES OF STUMP. BACKFILL & RECOMPACT AS REQUIRED TO RESTORE EXISTING ADJACENT SLOPE (1:1 MAX). THE GRADE CAN BE FILLED TO COVER PLASTIC. SEE LANDSCAPING PLANS FOR TREE REPLACEMENT SPECIES & LOCATIONS.

APPROXIMATE LIMIT OF WORK

DEMOLITION NOTES

1. PROTECT IN PLACE ALL EX. TREES NOT LABELED TO BE REMOVED. USE TREE PROTECTION MEASURES AS REQUIRED TO COMPLY WITH LOCAL REGULATIONS.
2. THE CONTRACTOR SHALL PROVIDE LABOR, MATERIAL AND EQUIPMENT REQUIRED FOR DEMOLISHING, CUTTING, CAPPING, REMOVING AND DISPOSING OF EXISTING IMPROVEMENTS AS DESIGNATED AND SHOWN ON THE DRAWINGS AND AS REQUIRED, UNLESS OTHERWISE NOTED.
3. THE CONTRACTOR SHALL SAWCUT EXISTING ASPHALT AND CONCRETE PAVEMENT AND SIDEWALKS AT THE NEAREST CONSTRUCTION JOINT OR SCORE LINE TO PROVIDE FOR PROPOSED CONSTRUCTION.
4. THE CONTRACTOR SHALL DEMOLISH, ABANDON OR REROUTE EXISTING UTILITIES AS REQUIRED FOR PROPOSED CONSTRUCTION. UTILITIES AND APPURTENANCES TO REMAIN WITHIN THE PROJECT LIMIT OF WORK SHALL BE PROTECTED.
5. THE CONTRACTOR SHALL COORDINATE ALL UTILITY SHUT-DOWNS WITH OWNER.

MIDTOWN TERRACE SUBD. NO. 7
'S' MAPS 21, 08/20/1958
AB 2781

(PARCEL 'B', 'S' MAPS 24, 12/16/1958)

CITY OF SAN FRANCISCO
SUMMIT RESERVOIR SITE
AB 2719 C

FOOTPATH

SAWCUT EXISTING AC PAVEMENT

MATCHLINE SEE SHEET C-3.0

SANDIS SUNNYVALE SCALE: 1"=20'

SIMPSON GUMPERTZ & HEGER
Engineering of Structures and Building Enclosures

Simpson Gumpertz & Heger Inc.
The Landmark @ One Market, Suite 600
San Francisco, California 94105
415.495.3700 fax: 415.495.3500
www.sgh.com

Boston
Los Angeles
New York
San Francisco
Washington, DC

SANDIS
CIVIL ENGINEERS
SURVEYORS
PLANNERS

936 E. Duane Avenue,
Sunnyvale, Ca. 94085
P. 408.636.0900
F. 408.636.0999
www.sandis.net

SUNNYVALE • ROSEVILLE • OAKLAND

DATE FEBRUARY 15, 2013

KENNETH N. OLCOTT
R.C.E. NO. 51079, EXPIRES 9-30-13

No.	Date	Description	By
0		ISSUED FOR REVIEW	

SITE & EROSION CONTROL IMPROVEMENTS FOR SUTRO TOWER

1 LA AVANZADA ST
SAN FRANCISCO
CALIFORNIA

Project

ROADWAY DEMOLITION PLAN

Drawing Title

Commission	Checked	Date
212121	JP	02/15/13
Drawn	Approved	Scale
LW	AT	1"=20'

Drawing No.

C-3.1

Seal

File: X:\P\212121\ENG\CONTRACT\C-3.1_RD-DEMO.dwg Date:Feb 14, 2013 - 4:42pm, tdavis

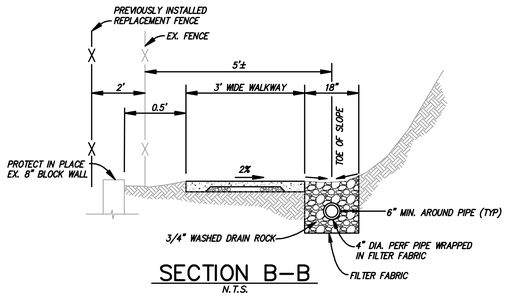

SECTION B–B
N.T.S.

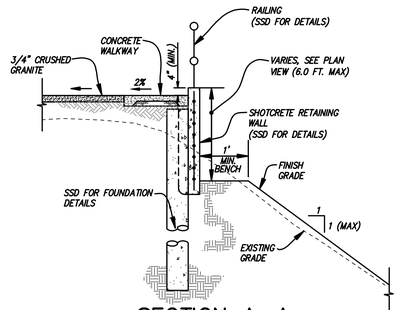

SECTION A–A
TYPICAL RETAINING WALL SECTION
N.T.S.

NOTE: S.S.D. FOR PROFILE VIE

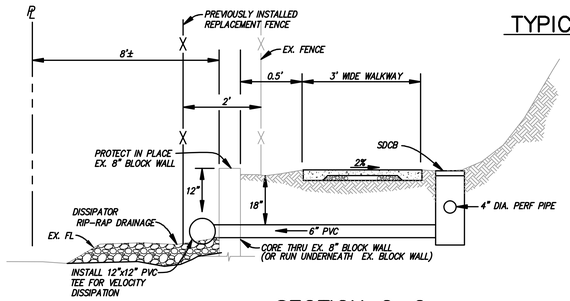

SECTION C–C
N.T.S.

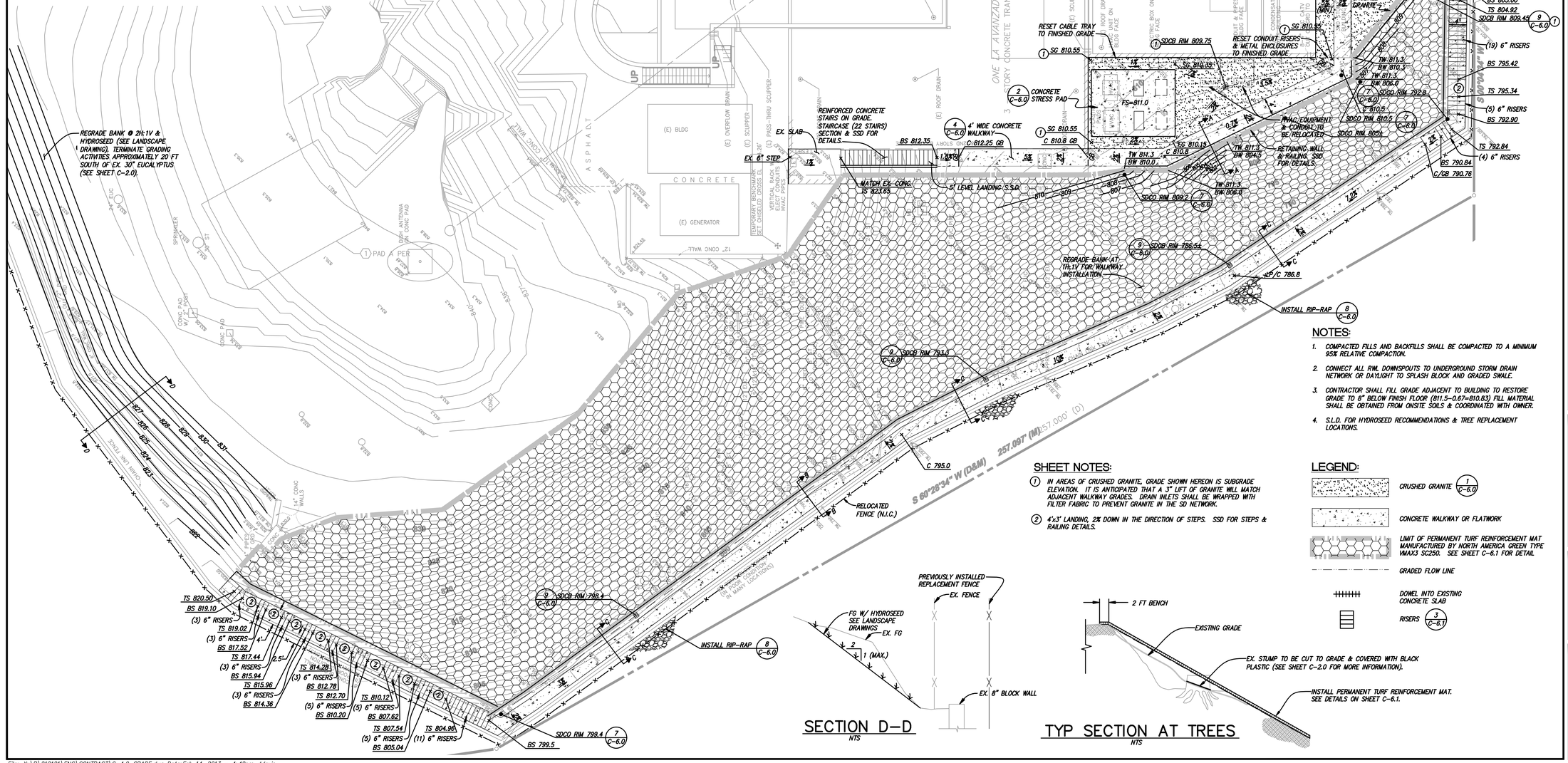

SECTION D–D
NTS

TYP SECTION AT TREES
NTS

NOTES:
1. COMPACTED FILLS AND BACKFILLS SHALL BE COMPACTED TO A MINIMUM 95% RELATIVE COMPACTION.
2. CONNECT ALL RWL DOWNSPOUTS TO UNDERGROUND STORM DRAIN NETWORK OR DAYLIGHT TO SPLASH BLOCK AND GRADED SWALE.
3. CONTRACTOR SHALL FILL GRADE ADJACENT TO BUILDING TO RESTORE GRADE TO 8" BELOW FINISH FLOOR (811.5–0.67=810.83) FILL MATERIAL SHALL BE OBTAINED FROM ONSITE SOILS & COORDINATED WITH OWNER.
4. S.L.D. FOR HYDROSEED RECOMMENDATIONS & TREE REPLACEMENT LOCATIONS.

SHEET NOTES:
1. IN AREAS OF CRUSHED GRANITE, GRADE SHOWN HEREON IS SUBGRADE ELEVATION. IT IS ANTICIPATED THAT A 3" LIFT OF GRANITE WILL MATCH ADJACENT WALKWAY GRADES. DRAIN INLETS SHALL BE WRAPPED WITH FILTER FABRIC TO PREVENT GRANITE IN THE SD NETWORK.
2. 4'x3' LANDING, 2% DOWN IN THE DIRECTION OF STEPS. SSD FOR STEPS & RAILING DETAILS.

LEGEND:
- CRUSHED GRANITE (1 C-6.0)
- CONCRETE WALKWAY OR FLATWORK
- LIMIT OF PERMANENT TURF REINFORCEMENT MAT MANUFACTURED BY NORTH AMERICA GREEN TYPE VMAX3 SC250. SEE SHEET C-6.1 FOR DETAIL
- GRADED FLOW LINE
- DOWEL INTO EXISTING CONCRETE SLAB
- RISERS (3 C-6.1)

SIMPSON GUMPERTZ & HEGER
Engineering of Structures and Building Enclosures
Simpson Gumpertz & Heger Inc.
The Landmark @ One Market, Suite 600
San Francisco, California 94105
415.495.3700 fax: 415.495.3590
www.sgh.com
Boston, Los Angeles, New York, San Francisco, Washington, DC

SANDIS
CIVIL ENGINEERS
SURVEYORS
PLANNERS
936 E. Duane Avenue,
Sunnyvale, Ca. 94085
P. 408.636.0900
F. 408.636.0999
www.sandis.net
SUNNYVALE - ROSEVILLE - OAKLAND

DATE FEBRUARY 15 , 2013

KENNETH N. OLCOTT
R.C.E. NO. 51079, EXPIRES 9-30-13

No.	Date	Description	By
0		ISSUED FOR REVIEW	

SITE & EROSION CONTROL IMPROVEMENTS FOR SUTRO TOWER
1 LA AVANZADA ST SAN FRANCISCO CALIFORNIA

Project

SITE GRADING AND DRAINAGE PLAN

Drawing Title

Commission	Checked	Date
212121	JP	02/15/13
Drawn	Approved	Scale
LW	AT	1"=10'

Drawing No.

C-4.0

Seal

File: X:\P\212121\ENG\CONTRACT\C-4.0_GRADE.dwg Date:Feb 14, 2013 - 4:42pm, tdavis

LEGEND:

- AC PAVEMENT (1 / C-6.1)
- RIP-RAP LINED SWALE (8 / C-6.)
- 780 — FINISH GRADE CONTOUR
- 780 — EXISTING GRADE CONTOUR
- SAWCUT & CONFORM (2 / C-6.1)
- REMOVE TREE AND CUT TREE STUMP FLUSH WITH GRADE & PARALLEL WITH THE SLOPE. COVER STUMP WITH 10 MIL BLACK PLASTIC SHEET AND EXTEND 8" BELOW GRADE & SECURELY STAPLE TO SIDES OF STUMP. BACKFILL & RECOMPACT AS REQUIRED TO RESTORE EXISTING ADJACENT SLOPE (1:1 MAX). THE GRADE CAN BE FILLED TO COVER PLASTIC. SEE LANDSCAPING PLANS FOR TREE REPLACEMENT SPECIES & LOCATIONS.

NOTES:

1. COMPACTED FILLS AND BACKFILLS SHALL BE COMPACTED TO A MINIMUM 95% RELATIVE COMPACTION BASED ON THE LABORATORY TEST METHOD ASTM 1557.
2. PROTECT IN PLACE ALL EX. TREE NOT LABELED TO BE REMOVED. USE TREE PROTECTION MEASURES AS REQUIRED TO COMPLY WITH LOCAL REGULATIONS.
3. ALL VALVE BOXES & SURFACE UTILITIES SHALL BE RESET TO FINISH GRADE.

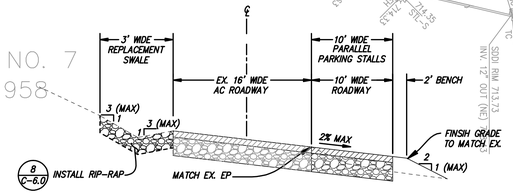

SECTION A–A
N.T.S.

MIDTOWN TERRACE SUBD. NO. 7
'S' MAPS 21, 08/20/1958
AB 2781

CITY OF SAN FRANCISCO
(PARCEL 'B', 'S' MAPS 24, 12/16/1958)

FOOTPATH

CITY OF SAN FRANCISCO
SUMMIT RESERVOIR SITE
AB 2719 C

MATCHLINE SEE SHEET C-4.0

PROPOSED FENCE (N.I.C.)

FACE OF EX. SECURITY GUARD BLDG.

312 FT ±

FILL BANK AS NECESSARY TO ESTABLISH 2% ROADWAY CROSS SLOPE & 2 FT SHOULDER

PROPOSED EDGE OF PAVEMENT

EXISTING FENCE

2 / C-6.1 SAWCUT AND CONFORM

FL 795.6±

MATCH EX. EDGE OF PAVEMENT

3" WIDE REPLACEMENT SWALE (SEE SECTION A–A, THIS SHEET) TIE INTO DOWNSTREAM FLOWLINE TO ENSURE POSITIVE DRAINAGE.

2 / C-6.1 SAWCUT AND CONFORM

MATCH EX. FL 764.8±

SCALE: 1"=20'

SIMPSON GUMPERTZ & HEGER
Engineering of Structures and Building Enclosures

Simpson Gumpertz & Heger Inc.
The Landmark @ One Market, Suite 600
San Francisco, California 94105
415.495.3700 fax: 415.495.3500
www.sgh.com

Boston
Los Angeles
New York
San Francisco
Washington, DC

SANDIS
CIVIL ENGINEERS
SURVEYORS
PLANNERS
936 E. Duane Avenue,
Sunnyvale, Ca. 94085
P. 408.636.0900
F. 408.636.0999
www.sandis.net
SUNNYVALE - ROSEVILLE - OAKLAND

DATE FEBRUARY 15, 2013

KENNETH N. OLCOTT
R.C.E. NO. 51079, EXPIRES 9-30-13

No.	Date	Description	By
0		ISSUED FOR REVIEW	

SITE & EROSION CONTROL IMPROVEMENTS FOR SUTRO TOWER
1 LA AVANZADA ST
SAN FRANCISCO
CALIFORNIA

Project

ROADWAY GRADING AND DRAINAGE PLAN

Drawing Title

Commission	Checked	Date
212121	JP	02/15/13
Drawn	Approved	Scale
LW	AT	1"=20'

Drawing No.
C-4.1

Seal

File: X:\P\212121\ENG\CONTRACT\C-4.1_RD-GRADE.dwg Date:Feb 14, 2013 - 4:42pm, ldavis

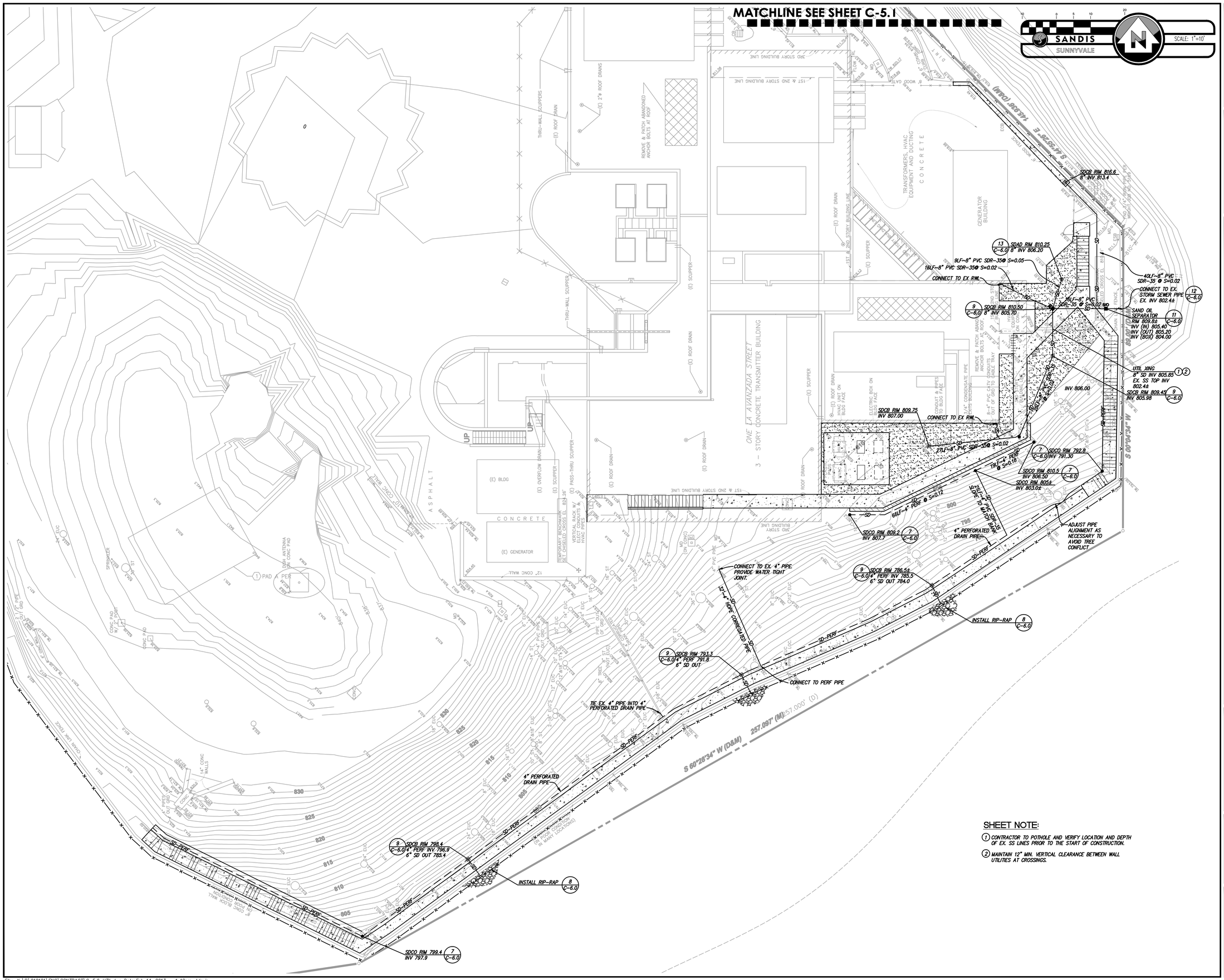

SHEET NOTE:

1. CONTRACTOR TO POTHOLE AND VERIFY LOCATION AND DEPTH OF EX. SS LINES PRIOR TO THE START OF CONSTRUCTION.
2. MAINTAIN 12" MIN. VERTICAL CLEARANCE BETWEEN WALL UTILITIES AT CROSSINGS.

SIMPSON GUMPERTZ & HEGER
Engineering of Structures and Building Enclosures
Simpson Gumpertz & Heger Inc.
The Landmark @ One Market, Suite 600
San Francisco, California 94105
415.495.3700 fax: 415.495.3550
www.sgh.com
Boston
Los Angeles
New York
San Francisco
Washington, DC

SANDIS
CIVIL ENGINEERS
SURVEYORS
PLANNERS
936 E. Duane Avenue,
Sunnyvale, Ca. 94085
P. 408.636.0900
F. 408.636.0999
www.sandis.net
SUNNYVALE · ROSEVILLE · OAKLAND

DATE FEBRUARY 15, 2013

KENNETH N. OLCOTT
R.C.E. NO. 51079, EXPIRES 9-30-13

No.	Date	Description	By
0		ISSUED FOR REVIEW	

SITE & EROSION CONTROL IMPROVEMENTS FOR SUTRO TOWER

1 LA AVANZADA ST
SAN FRANCISCO
CALIFORNIA

Project

UTILITY PLAN

Drawing Title

Commission	Checked	Date
212121	JP	02/15/13
Drawn	Approved	Scale
LW	AT	1"=10'

Drawing No.

C-5.0

Seal

File: X:\P\212121\ENG\CONTRACT\C-5.0_UTIL.dwg Date:Feb 14, 2013 - 4:42pm, tdavis

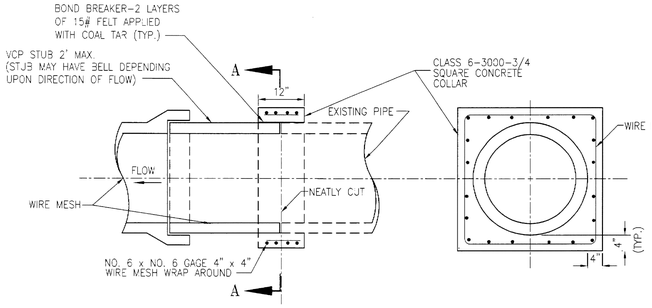

DETAIL "A"

SECTION "A"-"A"

CONNECTION TO SIMILAR SIZE SEWERS

NO SCALE

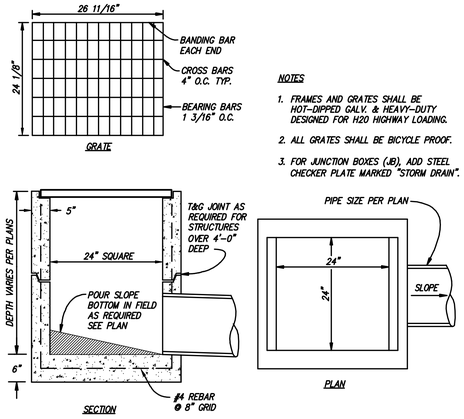

NOTES

1. FRAMES AND GRATES SHALL BE HOT-DIPPED GALV. & HEAVY-DUTY DESIGNED FOR H20 HIGHWAY LOADING.
2. ALL GRATES SHALL BE BICYCLE PROOF.
3. FOR JUNCTION BOXES (JB), ADD STEEL CHECKER PLATE MARKED "STORM DRAIN".

24" CATCH BASIN DETAIL 9

N.T.S.

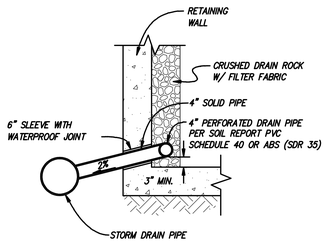

PERFORATED PIPE CONNECTION DETAIL 6

N.T.S.

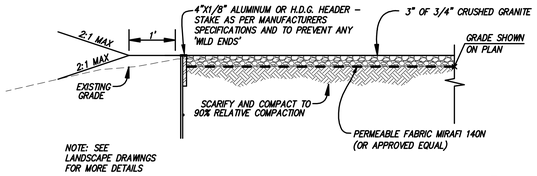

HEADER BOARD AND CRUSHED GRANITE 1

N.T.S.

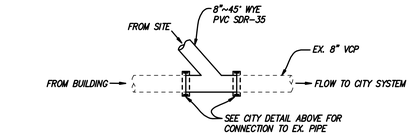

CONNECTION TO EX. SS LATERAL 12

N.T.S.

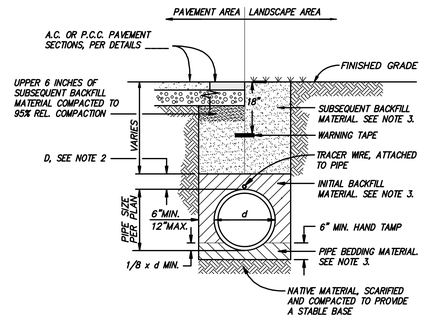

NOTE:

1. PLACE CUT OFF PLUG OF IMPERMEABLE MATERIAL WHERE ALL TRENCHES ENTER A PAVEMENT AREA.
2. D=6" MIN. FOR PIPE SIZES ≤ 12 INCHES
   D=12" MIN. FOR PIPE SIZES > 12 INCHES
3. COMPACT BACKFILL AND BEDDING MATERIALS TO THE FOLLOWING PERCENT RELATIVE COMPACTION:

COMPACTION REQUIREMENTS					
	TRENCH SAND	TRENCH GRAVEL	APPROVED NATIVE	IMPORTED FILL	CLASS II AGGREGATE BASE
SUBSEQUENT BACKFILL MATERIAL (UNDER PAVEMENT)	N/A	N/A	90%	90%	90%
SUBSEQUENT BACKFILL MATERIAL (IN LANDSCAPE)	N/A	N/A	85%	85%	90%
INITIAL BACKFILL MATERIAL	90%	90%	N/A	N/A	N/A
BEDDING MATERIAL	90%	90%	N/A	N/A	N/A

TRENCH DETAIL 10

N.T.S.

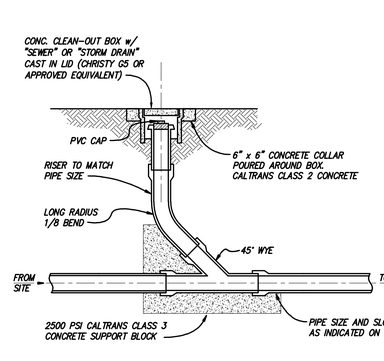

CLEANOUT WITH LATERAL STUB 7

N.T.S.

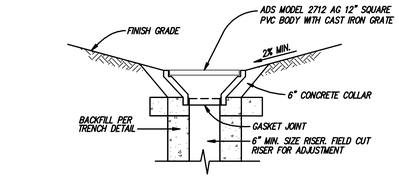

GRATE & RISER DETAIL

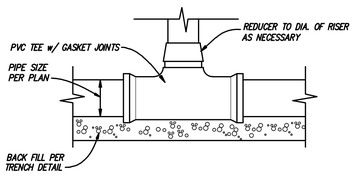

TEE & RISER DETAIL

AREA DRAIN 13

N.T.S.

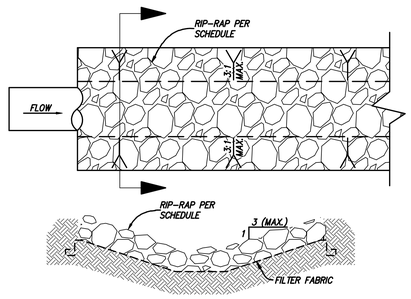

SECTION

NOTE: RIP RAP SIZING TO BE DETERMINED BY ENGINEER

"d50" DIA.	"x" DEPTH	% SMALLER THAN GIVEN SIZE BY WEIGHT	INTERMEDIATE ROCK DIMENSION (IN.)
6"ø	1.0'	70-100	12
		50-70	9
		35-50	6
		2-10	2
9"ø	1.5'	70-100	15
		50-70	12
		35-50	9
		2-10	3
12"ø	2.0'	70-100	21
		50-70	18
		35-50	12
		2-10	4

RIP-RAP DETAIL 8

N.T.S.

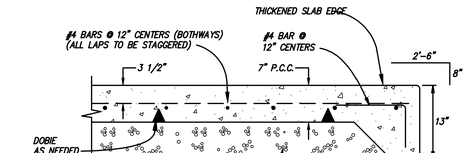

CONCRETE STRESS PAD 2

N.T.S.

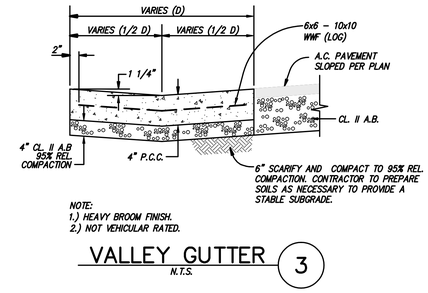

NOTE:
1.) HEAVY BROOM FINISH.
2.) NOT VEHICULAR RATED.

VALLEY GUTTER 3

N.T.S.

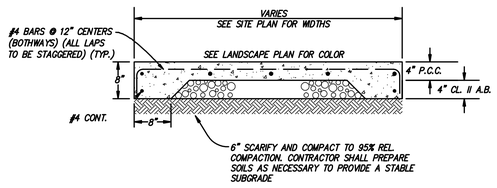

NOTE:
1.) HEAVY BROOM FINISH.
2.) NOT VEHICULAR RATED.

CONCRETE SIDEWALK 4

N.T.S.

SLAB THICKNESS, "T" (IN.)	JOINT DEPTH (IN.)	CLEARANCE TO TOP OF REINF. (IN.)	MAX. JOINT SPACING (FT.)
4"	1"	1½"	6'
5"	1¼"	2"	6'
6"	1½"	2½"	6'

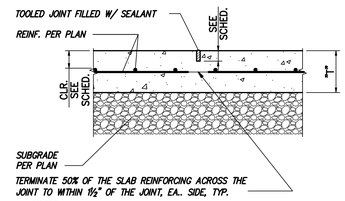

NOTES:

1. FILL JOINT WITH SEALANT AFTER SLAB HAS BEEN CURED.
2. CONSTRUCTION JOINT MAY REPLACE CONTROL JOINT.
3. LOCATE CONTROL JOINTS ON A RECTANGULAR GRID, SPACED PER SCHEDULE, SUBMIT JOINT DETAIL AND LAYOUT TO ARCHITECT FOR REVIEW.
4. ALTERNATIVE: MAKE SAWCUT JOINTS WITHIN 4 TO 12 HOURS AFTER CONCRETE PLACEMENT. PROPER TIMING IS DICTATED BY THE RATE OF HARDENING OF THE CONCRETE.

TYPICAL SLAB ON GRADE CONTROL JOINT 5

N.T.S.

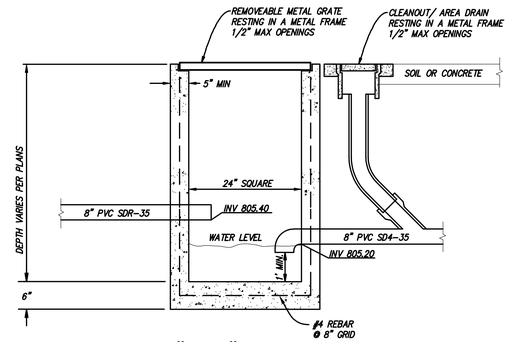

24"X24" CATCH BASIN CITY SAND TRAP DETAIL 11

N.T.S.

SIMPSON GUMPERTZ & HEGER
Engineering of Structures and Building Enclosures
Simpson Gumpertz & Heger Inc.
The Landmark @ One Market, Suite 600
San Francisco, California 94105
415.495.3700 fax: 415.495.3500
www.sgh.com
Boston, Los Angeles, New York, San Francisco, Washington, DC

SANDIS
CIVIL ENGINEERS
SURVEYORS
PLANNERS
936 E. Duane Avenue,
Sunnyvale, Ca. 94085
P. 408.636.0900
F. 408.636.0999
www.sandis.net
SUNNYVALE - ROSEVILLE - OAKLAND

DATE FEBRUARY 15, 2013

KENNETH N. OLCOTT
R.C.E. NO. 51079, EXPIRES 9-30-13

No.	Date	Description	By
0		ISSUED FOR REVIEW	

SITE & EROSION CONTROL IMPROVEMENTS FOR SUTRO TOWER
1 LA AVANZADA ST
SAN FRANCISCO
CALIFORNIA
Project

CONSTRUCTION DETAILS
Drawing Title

Commission	Checked	Date
212121	JP	02/15/13
Drawn	Approved	Scale
LW	AT	NO SCALE

Drawing No. **C-6.0**

Seal

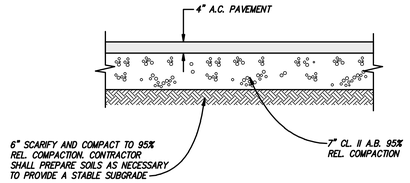

ASPHALT PAVEMENT SECTION 1
N.T.S.

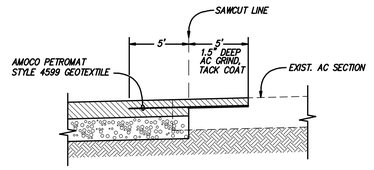

AC PAVEMENT GRIND CONFORM 2
N.T.S.

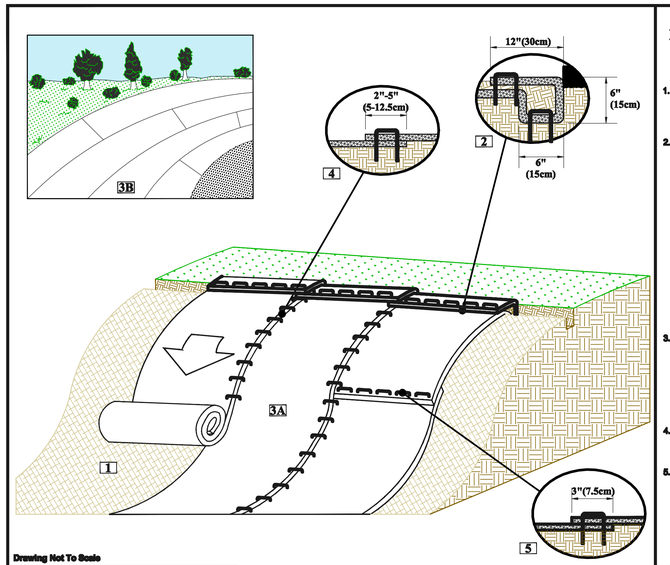

SLOPE INSTALLATION DETAIL

1. Prepare soil before installing rolled erosion control products (RECPs), including any necessary application of lime, fertilizer, and seed.
2. Begin at the top of the slope by anchoring the RECPs in a 6"(15cm) deep X 6"(15cm) wide trench with approximately 12" (30cm) of RECPs extended beyond the up-slope portion of the trench. Anchor the RECPs with a row of staples/stakes approximately 12" (30cm) apart in the bottom of the trench. Backfill and compact the trench after stapling. Apply seed to the compacted soil and fold the remaining 12"(30cm) portion of RECPs back over the seed and compacted soil. Secure RECPs over compacted soil with a row of staples/stakes spaced approximately 12"(30cm) apart across the width of the RECPs.
3. Roll the RECPs (A) down or (B) horizontally across the slope. RECPs will unroll with appropriate side against the soil surface. All RECPs must be securely fastened to soil surface by placing staples/stakes in appropriate locations as shown in the staple pattern guide.
4. The edges of parallel RECPs must be stapled with approximately 2" - 5" (5-12.5cm) overlap depending on the RECPs type.
5. Consecutive RECPs spliced down the slope must be end over end (Shingle style) with an approximate 3"(7.5cm) overlap. Staple through overlapped area, approximately 12"(30cm) apart across entire RECPs width.

*NOTE:
In loose soil conditions, the use of staple or stake lengths greater than 6"(15cm) may be necessary to properly secure the RECPs.

Tensar. NORTH AMERICAN GREEN*
5401 St. Wendel - Cynthiana Rd.
Poseyville, IN 47633
PH: 800-722-2040
www.nagreen.com

Disclaimer:
The information presented herein is general design information only. For specific applications, consult an independent professional for further design guidance.

Drawn on: 3-16-11

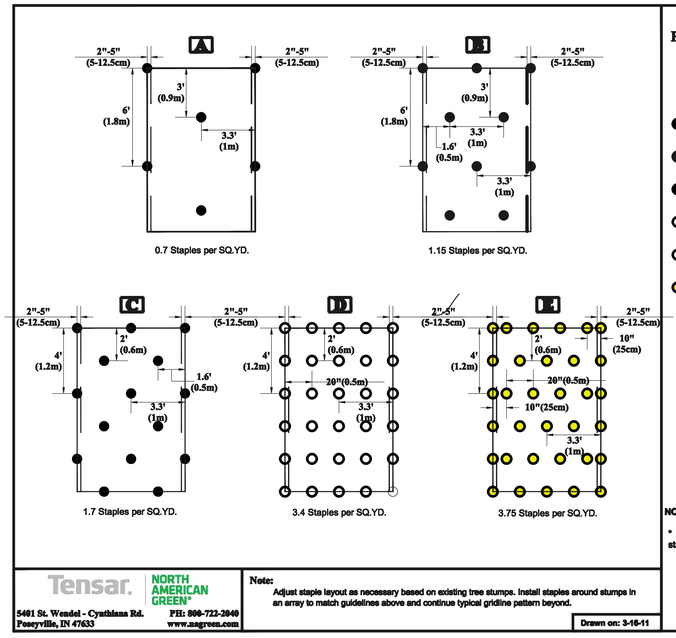

STAPLE PATTERN GUIDE

- 4:1 Slopes (A)
- 3:1 Slopes (B)
- 2:1 Slopes (C)
- 1:1 & Steeper Slopes (D)
- Medium/High Flow Channel (D)
- High Flow Channel And Shoreline (E)

NOTES:

* Use ECMDS* for more accurate staple pattern selection.

Drawing Not To Scale

Tensar. NORTH AMERICAN GREEN*
5401 St. Wendel - Cynthiana Rd.
Poseyville, IN 47633
PH: 800-722-2040
www.nagreen.com

Note:
Adjust staple layout as necessary based on existing tree stumps. Install staples around stumps in an array to match guidelines above and continue typical gridline pattern beyond.

Drawn on: 3-16-11

NOTE: SEE LANDSCAPE PLANS FOR HYDROSEED RECOMMENDATION

SIMPSON GUMPERTZ & HEGER
Engineering of Structures and Building Enclosures

Simpson Gumpertz & Heger Inc.
The Landmark @ One Market, Suite 600
San Francisco, California 94105
415.495.3700 fax 415.495.3660
www.sgh.com

Boston
Los Angeles
New York
San Francisco
Washington, DC

SANDIS
CIVIL ENGINEERS
SURVEYORS
PLANNERS

936 E. Duane Avenue,
Sunnyvale, Ca. 94085
P. 408.636.0900
F. 408.636.0999
www.sandis.net

SUNNYVALE - ROSEVILLE - OAKLAND

DATE FEBRUARY 15 , 2013

KENNETH N. OLCOTT
R.C.E. NO. 51079, EXPIRES 9-30-13

No.	Date	Description	By
0		ISSUED FOR REVIEW	

SITE & EROSION CONTROL IMPROVEMENTS FOR SUTRO TOWER
1 LA AVANZADA ST
SAN FRANCISCO
CALIFORNIA

Project

CONSTRUCTION DETAILS

Drawing Title

Commission	Checked	Date
212121	JP	02/15/13
Drawn	Approved	Scale
LW	AT	NO SCALE

Drawing No.
C-6.1

Seal

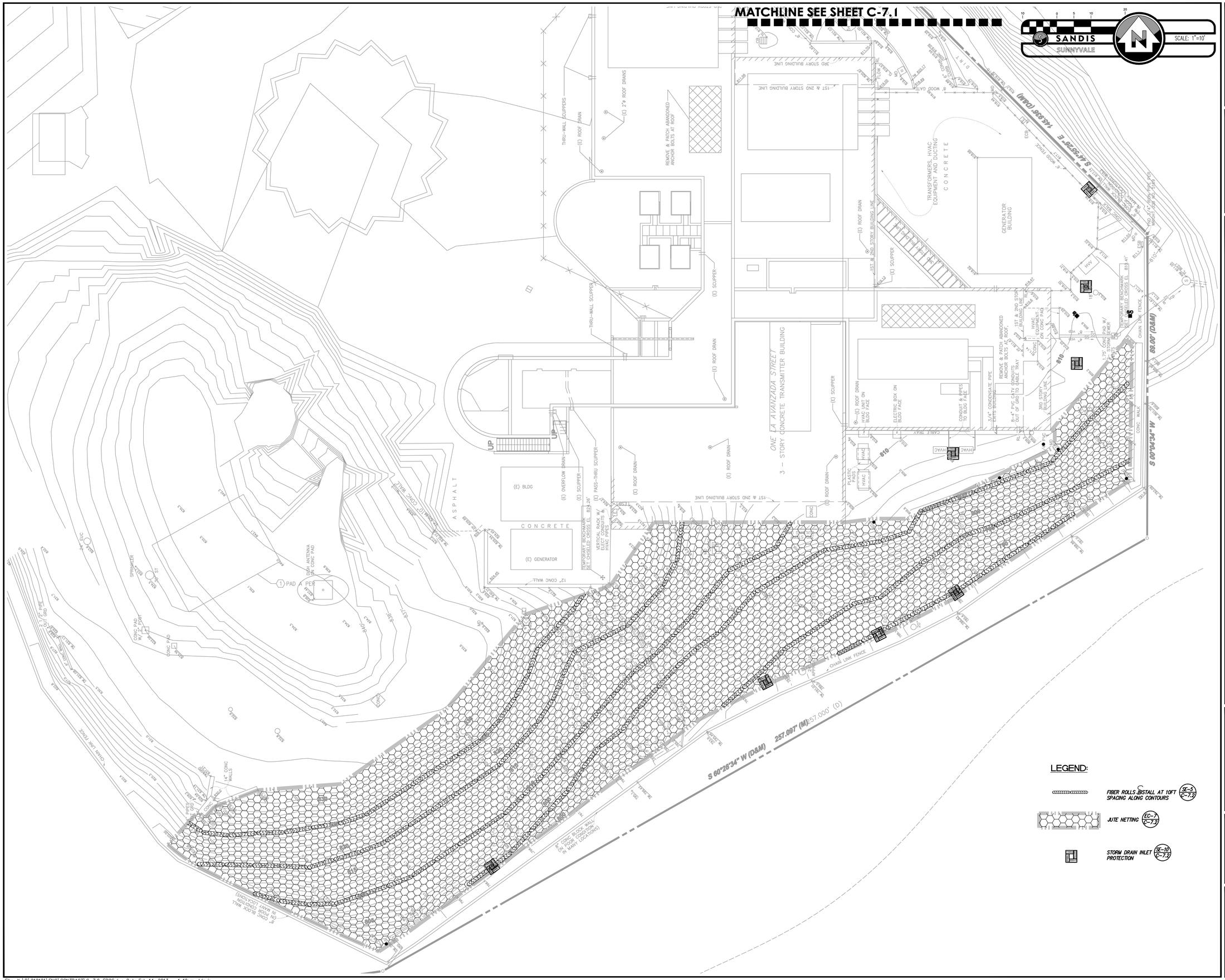

SIMPSON GUMPERTZ & HEGER
Engineering of Structures and Building Enclosures

Simpson Gumpertz & Heger Inc.
The Landmark @ One Market, Suite 600
San Francisco, California 94105
415.495.3700 fax: 415.495.3550
www.sgh.com

Boston
Los Angeles
New York
San Francisco
Washington, DC

SANDIS
CIVIL ENGINEERS
SURVEYORS
PLANNERS

936 E. Duane Avenue,
Sunnyvale, Ca. 94085
P. 408.636.0900
F. 408.636.0999
www.sandis.net

SUNNYVALE · ROSEVILLE · OAKLAND

DATE FEBRUARY 15, 2013

KENNETH N. OLCOTT
R.C.E. NO. 51079, EXPIRES 9-30-13

No.	Date	Description	By
0		ISSUED FOR REVIEW	

SITE & EROSION CONTROL IMPROVEMENTS FOR SUTRO TOWER

1 LA AVANZADA ST
SAN FRANCISCO
CALIFORNIA

Project

SITE TEMPORARY EROSION CONTROL PLAN

Drawing Title

Commission	Checked	Date
212121	JP	02/15/13
Drawn	Approved	Scale
LW	AT	1"=10'

Drawing No.

C-7.0

Seal

File: X:\P\212121\ENG\CONTRACT\C-7.0_EROS.dwg Date:Feb 14, 2013 - 4:42pm, tdavis

LEGEND

FIBER ROLLS (SE-5 C-7.2)

LIMIT OF WORK

NOTE:
CONTRACTOR TO INSTALL GEOTECHTILES & MATS AS NECESSARY TO PREVENT EROSION

MIDTOWN TERRACE SUBD. NO. 7
'S' MAPS 21, 08/20/1958
AB 2781

(PARCEL 'B', 'S' MAPS 24, 12/16/1958)

2

FOOTPATH

CITY OF SAN FRANCISCO
SUMMIT RESERVOIR SITE
AB 2719 C

MATCHLINE SEE SHEET C-7.0

WM-8 C-7.2 CONCRETE WASHOUT BASIN

TC-1 C-7.2 STABILIZED CONSTRUCTION ENTRANCE

TERMINATE FIBER ROLLS AT EDGE OF IMPROVEMENTS

PLACE SANDBAGS IN SWALE FOR VELOCITY DISSIPATION

PROTECT DOWNSTREAM INLET(S)

SCALE: 1"=20'

SIMPSON GUMPERTZ & HEGER
Engineering of Structures and Building Enclosures

Simpson Gumpertz & Heger Inc.
The Landmark @ One Market, Suite 600
San Francisco, California 94105
415.495.3700 fax: 415.495.3590
www.sgh.com

Boston
Los Angeles
New York
San Francisco
Washington, DC

SANDIS
CIVIL ENGINEERS
SURVEYORS
PLANNERS

936 E. Duane Avenue,
Sunnyvale, Ca. 94085
P. 408.636.0900
F. 408.636.0999
www.sandis.net

SUNNYVALE - ROSEVILLE - OAKLAND

DATE FEBRUARY 15, 2013

KENNETH N. OLCOTT
R.C.E. NO. 51079, EXPIRES 9-30-13

No.	Date	Description	By
0		ISSUED FOR REVIEW	

SITE & EROSION CONTROL IMPROVEMENTS FOR SUTRO TOWER

1 LA AVANZADA ST
SAN FRANCISCO
CALIFORNIA

Project

ROADWAY TEMPORARY EROSION CONTROL PLAN

Drawing Title

Commission	Checked	Date
212121	JP	02/15/13
Drawn	Approved	Scale
LW	AT	1"=20'

Drawing No.

C-7.1

Seal

File: X:\P\212121\ENG\CONTRACT\C-7.1_RD-EROS.dwg Date:Feb 14, 2013 - 4:43pm, tdavis

EC-7 Geotextiles and Mats

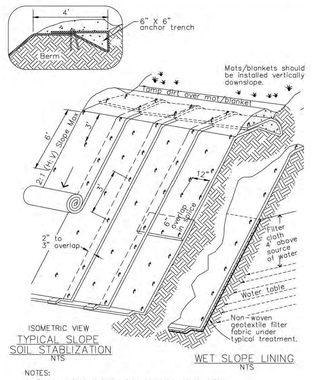

NOTES:
1. Slope surface shall be free of rocks, clods, sticks and grass. Mats/blankets shall have good soil contact.
2. Lay blankets loosely and stake or staple to maintain direct contact with the soil. Do not stretch.
3. Install per manufacturer's recommendations

TYPICAL INSTALLATION DETAIL

SE-5 Fiber Rolls

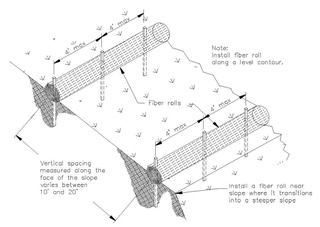

TYPICAL FIBER ROLL INSTALLATION
N.T.S.

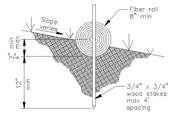

ENTRENCHMENT DETAIL
N.T.S.

SE-10 Storm Drain Inlet Protection

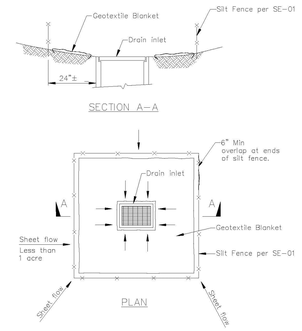

NOTES:
1. For use in areas where grading has been completed and final soil stabilization and seeding are pending.
2. Not applicable in paved areas.
3. Not applicable with concentrated flows.

Stabilized Construction Entrance/Exit TC-1

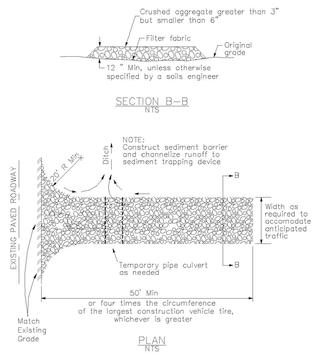

Concrete Waste Management WM-8

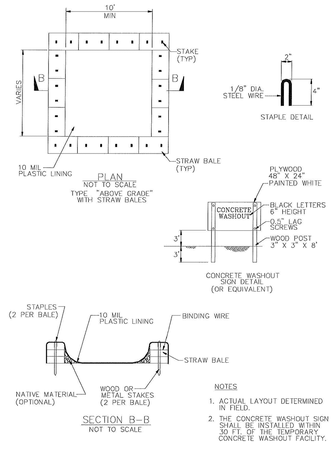

NOTES
1. ACTUAL LAYOUT DETERMINED IN FIELD.
2. THE CONCRETE WASHOUT SIGN SHALL BE INSTALLED WITHIN 30 FT. OF THE TEMPORARY CONCRETE WASHOUT FACILITY.

Concrete Waste Management WM-8

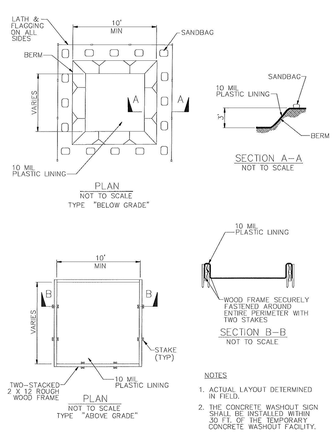

NOTES
1. ACTUAL LAYOUT DETERMINED IN FIELD.
2. THE CONCRETE WASHOUT SIGN SHALL BE INSTALLED WITHIN 30 FT. OF THE TEMPORARY CONCRETE WASHOUT FACILITY.

SIMPSON GUMPERTZ & HEGER
Engineering of Structures and Building Enclosures

Simpson Gumpertz & Heger Inc.
The Landmark @ One Market, Suite 600
San Francisco, California 94105
415.495.3700 fax: 415.495.3590
www.sgh.com

Boston
Los Angeles
New York
San Francisco
Washington, DC

SANDIS
CIVIL ENGINEERS
SURVEYORS
PLANNERS

936 E. Duane Avenue,
Sunnyvale, Ca. 94085
P. 408.636.0900
F. 408.636.0999
www.sandis.net

SUNNYVALE • ROSEVILLE • OAKLAND

DATE FEBRUARY 15, 2013

KENNETH N. OLCOTT
R.C.E. NO. 51079, EXPIRES 9-30-13

No.	Date	Description	By
0		ISSUED FOR REVIEW	

SITE & EROSION CONTROL IMPROVEMENTS FOR SUTRO TOWER
1 LA AVANZADA ST
SAN FRANCISCO
CALIFORNIA

Project

EROSION CONTROL DETAILS

Drawing Title

Commission	Checked	Date
212121	JP	02/15/13
Drawn	Approved	Scale
LW	AT	NO SCALE

Drawing No.
C-7.2

Seal

File: X:\P\212121\ENG\CONTRACT\C-7.2_EROS_DETAILS.dwg Date:Feb 14, 2013 - 4:43pm, tdavis

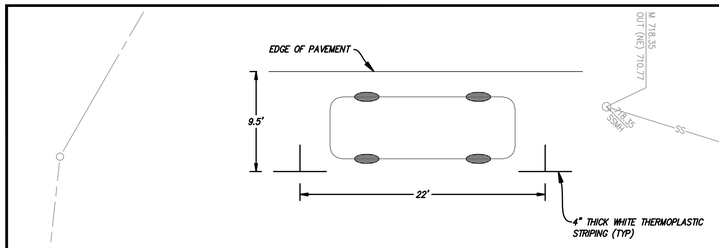

TYPICAL PARALLEL PARKING STALL
N.T.S.

LEGEND:

AC PAVEMENT (1 C-6.1)

SCALE: 1"=20'

MIDTOWN TERRACE SUBD. NO. 7
'S' MAPS 21, 08/20/1958
AB 2781

2

(PARCEL 'B', 'S' MAPS 24, 12/16/1958)
CITY OF SAN FRANCISCO

FOOTPATH

STRIPE FOR NO PARKING

PARALLEL PARKING STALL, SEE TYP. DETAIL THIS SHEET (11 STALLS)

CITY OF SAN FRANCISCO
SUMMIT RESERVOIR SITE
AB 2719 C

SIMPSON GUMPERTZ & HEGER
Engineering of Structures and Building Enclosures

Simpson Gumpertz & Heger Inc.
The Landmark @ One Market, Suite 600
San Francisco, California 94105
415.495.3700 fax: 415.495.3590
www.sgh.com

Boston
Los Angeles
New York
San Francisco
Washington, DC

SANDIS
CIVIL ENGINEERS
SURVEYORS
PLANNERS

936 E. Duane Avenue,
Sunnyvale, Ca. 94085
P. 408.636.0900
F. 408.636.0999
www.sandis.net

SUNNYVALE - ROSEVILLE - OAKLAND

DATE FEBRUARY 15, 2013

KENNETH N. OLCOTT
R.C.E. NO. 51079, EXPIRES 9-30-13

No.	Date	Description	By
0		ISSUED FOR REVIEW	

SITE & EROSION CONTROL IMPROVEMENTS FOR SUTRO TOWER

1 LA AVANZADA ST
SAN FRANCISCO
CALIFORNIA

Project

STRIPING PLAN

Drawing Title

Commission	Checked	Date
212121	JP	02/15/13
Drawn	Approved	Scale
LW	AT	1"=20'

Drawing No.

C-8.0

Seal

SITE AND EROSION CONTROL IMPROVEMENTS SUTRO TOWER SAN FRANCISCO, CALIFORNIA

VICINITY MAP

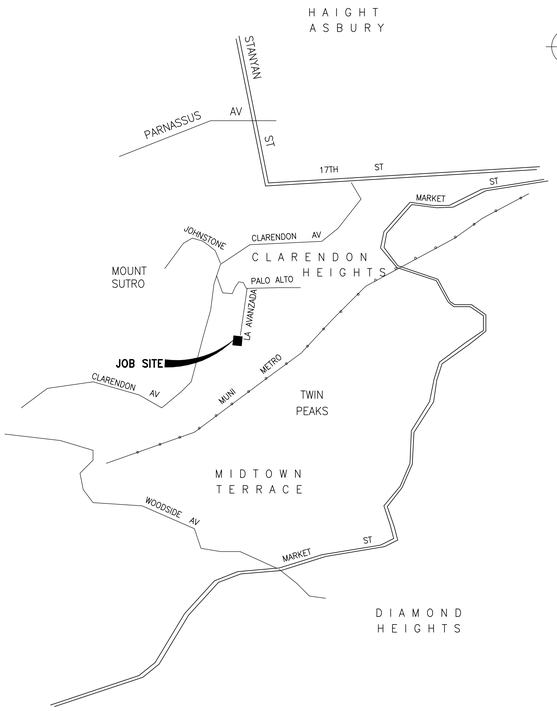

PROJECT SCOPE:

SITE AND EROSION CONTROL IMPROVEMENTS AT THE SUTRO TOWER FACILITY PER THE 2010 SAN FRANCISCO BUILDING CODE. IMPROVEMENTS INCLUDE, SIDEWALKS, STAIRS, PARTIAL DRIVEWAY, RETAINING WALL, AND DRAINAGE MEASURES. THE SCOPE ALSO INCLUDES INSTALLATION OF A NEW ANTENNA ON A SUPPORT PAD AT GRADE IN THE VICINITY OF THE TOWER.

.

LIST OF DRAWINGS

STRUCTURAL DRAWINGS

S0.0 TITLE SHEET, VICINITY MAP & LIST OF DRAWINGS
S0.1 GENERAL NOTES AND ABBREVIATIONS
S0.2 GENERAL NOTES (CONTINUED)
S1.0 TYPICAL DETAILS
S2.0 SITE PLAN
S3.0 FOUNDATION PLAN
S4.0 SITE SECTIONS AND SITE STAIR PLAN
S5.0 DETAILS

CIVIL DRAWINGS

C-1.0 COVER SHEET
C-2.0 SITE TOPOGRAPHIC SURVEY
C-2.1 ROADWAY TOPOGRAPHIC SURVEY
C-3.0 DEMOLITION PLAN
C-3.1 ROADWAY DEMOLITION PLAN
C-4.0 SITE GRADING AND DRAINAGE PLAN
C-4.1 ROADWAY GRADING AND DRAINAGE PLAN
C-5.0 UTILITY PLAN
C-6.0 CONSTRUCTION DETAILS
C-6.1 CONSTRUCTION DETAILS
C-7.0 SITE TEMPORARY EROSION CONTROL PLAN
C-7.1 ROADWAY TEMPORARY EROSION CONTROL PLAN
C-7.2 EROSION CONTROL DETAILS
C-8.0 STRIPING PLAN

LANDSCAPE DRAWING

L-1.0

SITE PLAN

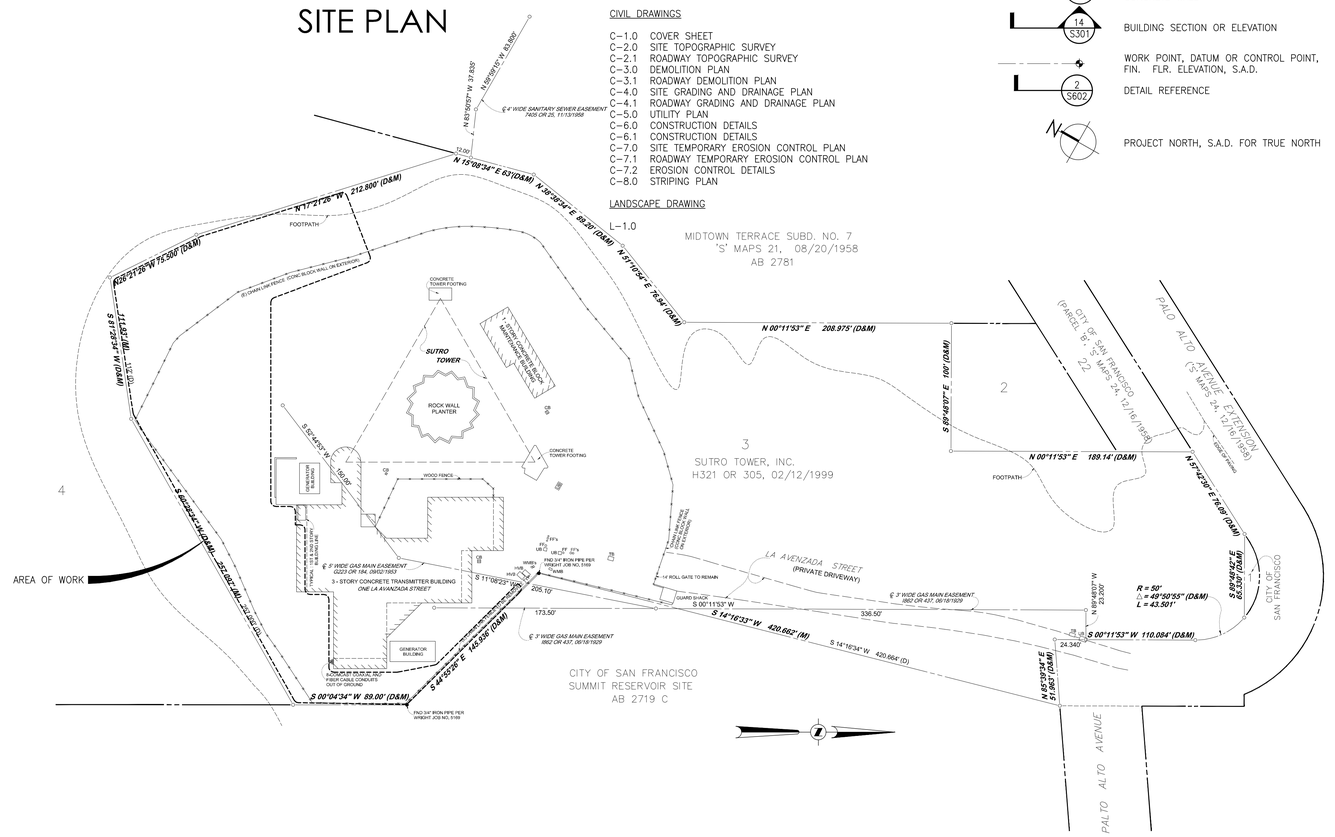

GENERAL SYMBOLS AND LEGEND

- 1 — REVISION
- K.9 — GRIDLINE INDICATING CENTERLINE OF CONCRETE OR PLYWOOD SHEAR WALL
- M — TYPICAL GRIDLINE INDICATING FACE OF CONCRETE WALL
- 14 / S301 — BUILDING SECTION OR ELEVATION
- WORK POINT, DATUM OR CONTROL POINT, FIN. FLR. ELEVATION, S.A.D.
- 2 / S602 — DETAIL REFERENCE
- PROJECT NORTH, S.A.D. FOR TRUE NORTH

SIMPSON GUMPERTZ & HEGER
Engineering of Structures and Building Enclosures

Simpson Gumpertz & Heger Inc.
The Landmark @ One Market, Suite 600
San Francisco, California 94105
415.495.3700 fax: 415.495.3550
www.sgh.com

Boston
Los Angeles
New York
San Francisco
Washington, DC

Sutro Tower Inc.
C/O Mr. Eric Dausman
5 La Avanzada Street
San Francisco, CA 94131

Client

No.	Date	Description	By
3	02/15/13	ISSUED FOR PERMIT	JLT
2	01/31/13	ISSUED FOR CLIENT REVIEW	JLT
1	11/28/12	ISSUED FOR CLIENT REVIEW	JLT

SITE & EROSION CONTROL IMPROVEMENTS SUTRO TOWER
1 LA AVANZADA ST
SAN FRANCISCO
CALIFORNIA

Project

TITLE SHEET VICINITY MAP & LIST OF DRAWINGS

Drawing Title

Commission	Checked	Date
067199.07	JLT	09/26/12
Drawn	Approved	Scale
JLT	ROH	NONE

REGISTERED PROFESSIONAL ENGINEER
RONALD O. HAMBURGER
No. 2951
STRUCTURAL
STATE OF CALIFORNIA

Seal

Drawing No.

S0.0

I:\SF\Projects\2006\067199.07 SMPR\Drawings\Working_Set\SMPR_S000.dwg, 3/26/2013 4:27:07 PM, DWG To PDF.pc3

GENERAL

1. General notes and typical details apply to all structural features, unless otherwise indicated.
2. If certain features are not fully shown or called out on the drawings or in the specifications, their construction shall be of the same character as for similar conditions.
3. The project specifications form a part of the contract documents.
4. Specifications, codes and standards noted in the contract documents shall be of the latest edition, unless otherwise noted.
5. Dimensions shall not be scaled off of the drawings.
6. All work shall conform to minimum standards of the 2010 San Francisco Building Code, of any codes listed in the drawings or specifications and of any regulating agencies which have authority over any portion of the work, including the State of California Division of Industrial Safety.
7. Prior to submitting shop drawings and product data, the Contractor shall verify that the submittals meet the requirements of the drawings and specifications. The Contractor shall specifically note any exceptions to these requirements with the submittal.
7. The Contractor shall maintain a continuous fire watch, with extinguishing equipment immediately available during welding, cutting or burning near combustible materials.
8. Openings, pockets, etc. shall not be placed in structural members unless specifically detailed on the structural drawings. Notify the Structural Engineer when work requires openings, pockets, etc. in structural members not shown on the structural drawings.
9. The contractor shall be responsible for coordinating the work of all trades and shall check all dimensions and holes and openings required in structural members. All discrepancies shall be called to the attention of the Structural Engineer and shall be resolved before proceeding with the work.
10. The contract documents represent the finished structure. They do not indicate the method of construction. The contractor shall provide all measures necessary to protect life and property during construction. Such measures shall include, but are not limited to, bracing and shoring for loads due to construction equipment and materials. Observation visits to the site by the Structural Engineer shall not include inspection of the above items.
11. The contractor shall use extreme caution to protect all conduits, pipes, ducts, architectural finishes and utilities not indicated as being removed from damage during construction and shall restore all damaged or otherwise affected elements to their preconstruction condition, unless otherwise noted.
12. The Sutro Tower transmission facilities must remain in operation at all times during the construction period. Contractor shall submit a written work plan indicating the proposed sequence and schedule of work and specific operations to be conducted, to Sutro Tower for review, prior to performing any work on site. The work plan shall be revised and resubmitted on a weekly basis to alert Sutro Tower as to the progress of work accomplished to date and current schedule for performing additional work. The contractor shall ensure safe travel of persons around areas of construction and and shall coordinate the all operations with Sutro Tower.
13. Sutro Tower is a radio transmission facility and emits high energy radio waves. The contractor shall be responsible for determining and implementing appropriate protective measures for personnel working on site.
14. Install antenna using manufacturer's standard connection hardware in accordance with manufacturer's specifications.
15. The contractor shall maintain a fire watch and employ the necessary protective measures when welding near flammable materials.
16. Work shown is new unless noted as existing: (E).
17. Existing construction shown on these drawings was obtained from site investigation and can be used for bidding purposes. The contractor shall verify all existing job conditions, review all drawings and verify dimensions prior to construction. The Contractor shall notify the Structural Engineer of all discrepancies and exceptions before proceeding with the work.
18. The removal, cutting, drilling, etc. of existing work shall be performed with care in order not to jeopardize the structural integrity of the building. If structural members or mechanical, electrical or architectural features not indicated for removal interferes with the new work, notify the Engineer immediately and obtain approval before removal of members.
19. The Contractor shall safely shore existing construction wherever existing supports are removed for the new work.
20. The contractor shall promptly repair any damage caused during operations, using materials and workmanship similar to that which was damaged.
21. All removed items, materials and debris, unless otherwise noted, shall be removed promptly from the site and disposed of in a legal manner.
22. Non-structural features not fully shown or noted on the structural drawings, but included in the work, may include but are not limited to:

    A. Architectural features
    - size and location of all concrete curbs, drains, slopes and depressed areas
    - changes in level, chamfers, grooves, inserts, etc.

    B. Mechanical, plumbing and electrical features
    - pipe runs, sleeves, hangers, trenches
    - electrical conduit runs, boxes, outlets in walls and slabs
    - anchorage and bracing for electrical, mechanical or plumbing equipment
    - anchor bolts for motor and equioment mounts
    - size and location of machine and equipment bases

FOUNDATIONS

1. The foundation design is based on recommendations in the geotechnical reports by Dames and Moore, dated 24 July 1969, 26 September 1969, and 25 November 1987.
2. The Contractor shall conform to the recommendations of the geotechnical report regarding site preparation and foundation construction. Copies of the report are available from the Structural Engineer.
3. Foundation excavations shall be inspected and approved by the Structural Engineer prior to placement of any reinforcing steel or concrete.
4. Foundation type: Conventional spread foundations and drilled piers (friction).

   Design Values:

   Footings (resting on rock):

Isolated Footings	Allowable Bearing Pressures
DL + LL	6000 psf
DL + LL + wind or seismic	8000 psf

Lateral Resistance – Piers (in rock)	
Passive Pressure	1,000 pcf
Coefficient of Friction	.60

5. All footings shall bear on firm undisturbed soil. Depth of footings and piers shown on the drawings are minimum, and the bottom of footing shall be lowered as required at the direction of the Structural engineer to remove soft or loose materials.
6. The Contractor shall be solely responsible for all excavation procedures, including lagging, shoring and protection of adjacent property, structures, streets and utilities in accordance with the local building department.
7. Backfill at walls shall not be placed until a minimum of 7 days after the completion of the walls and shall not be placed until after completed inspection of damp-proofing.

DRILLED PIERS

1. Soil condition is unknown. Be prepared to case holes in case of cave-ins or sloughing soil.
2. Do not place concrete in water. If water is present, place by tremie method. Clean area if soiled due to tremie operation. Do not flush into sewer systems.
3. Place concrete within 8 hours of drilling holes. Do not allow holes to stand unfilled over night.
4. Observation by the Structural Engineer is required prior to placing steel and prior to placing concrete. Schedule Engineer's visit 48 hours in advance.
5. Do not allow concrete to free fall more than five feet. Use a trunk or pump hose placed in center of hole.
6. Allowable tolerances:

   A. Drilled piers shall not deviate from the location shown on the plans by more than 2 inches in any direction.

   B. Drilled piers shall not deviate from a plumb line, referenced to the center of the drilled pier as described above, by more than two percent of the drilled pier length from the top to the point on interest.

CONCRETE & REINFORCING STEEL

1. All concrete shall be ready-mix in accordance with ASTM C94.
2. Cement: ASTM C150 Type II.
3. Aggregate: ASTM C33.
4. Non-shrink Grout: ASTM C1107, premixed, non-staining, non-shrink grout.
5. Grout or concrete containing more than 0.1 percent of soluble chloride shall not be used.
6. Mixes are to be reviewed by owner's testing lab and submitted to the Structural Engineer for approval. Do not cast concrete without approval by the Structural Engineer.

Concrete	Strength	Max. Agg. Size	Max. W/C Ratio	Air Content
Slab-on-grade & Footings	2500 psi	1"	0.45	1½% ± ½%
Mat Foundation for Antenna	5000 psi	1"	0.45	1½% ± ½%
Drilled Piers	4000 psi	½"	0.45	1½% ± 1½%
Shotcrete	4000 psi	⅜"	0.45	1½% ± 1½%

   See specifications for additional requirements. All concrete shall be hard rock aggregate, regular-weight concrete, 145 pcf, unless otherwise noted.
7. Inserts: All items to be cast in concrete, such as reinforcing dowels, bolts, anchors, pipes, sleeves, etc., shall be securely positioned in the forms before placing the concrete.
8. Pipes and electrical conduits shall not be embedded in structural concrete, except where specifically approved by the structural engineer.
9. Provide sleeves for plumbing and electrical openings in concrete before placing. Do not cut any reinforcing which may interfere. Coring in concrete is not permitted except as shown. Notify the structural engineer in advance of conditions that are not shown on the drawings.
10. Construction joints: Provide as detailed on drawings. Expose clean coarse aggregate solidly embedded in mortar matrix by sandblasting, bushammer, or other approved method. Location of construction joints shall be approved by the Structural Engineer.
11. Dry pack or place non-shrink grout under base plates, sill plates, etc., as required for full bearing.
12. Reinforcing steel: ASTM A615 Grade 60.
13. All reinforcement shall be continuous. Stagger splices where possible. Laps shall be per typical details, unless otherwise noted.
14. Minimum clear concrete cover for reinforcement, unless otherwise noted:

Cast against earth:	3 inches
Cast in forms and exposed to earth or weather:	
#6 bar and larger:	2 inches
#5 bar and smaller:	1½ inches
Not exposed to earth or weather:	
Slabs, walls and joists:	1 inch
Beams, girders and columns (to ties):	1½ inches

    Clearances are to closest reinforcement.

SHOTCRETE

1. Shotcrete materials and reinforcing shall comply with General Notes Section "Concrete and Reinforcing Steel," except as noted below.
2. All shotcrete operations shall be performed by a contractor with at least five years documented experience in such work.
3. Shotcrete work shall comply with SFBC Section 1913.
4. Shotcrete work shall follow the recommendations of the American Concrete Institute's publication ACI 506R-90, "Guide to Shotcrete", the American Concrete Institute's publication ACI 506.2-95, "Specification for Shotcrete", and applicable ASTM standards.
5. All shotcrete shall be by the wet-mix process.
6. Reinforcing Steel Placement: For #5 bars and smaller, minimum clearance between parallel reinforcement shall be 2½ inches. For bars larger than #5, minimum clearance between parallel reinforcement shall be equal to 6 bar diameters of the bar used. When two curtains of steel are provided, the horizontal and vertical reinforcement of the respective curtains shall be staggered.
7. Reinforcing Steel Splices: Only non-contact lap splices are permitted, with least 2 inches of clearance between bars. Splice lengths shall be as indicated in the Typical Details, with the length of lap splices increased by an amount equal to the clearance between the spliced bars.
8. Curing: In initial curing, shotcrete shall be kept continuously moist for 24 hours after placement is complete. Final curing shall continue for 7 days after shotcreting. Final curing shall consist of a fog spray or an approved moisture-retaining cover or membrane.
9. See Specifications for additional requirements.

STRUCTURAL STEEL & MISC. METALS

1. Fabrication and erection of structural steel shall be in accordance with the "Code of Standard Practice for Steel Buildings and Bridges" AISC 303-05.
2. Materials:

   A. Structural steel channel, angles, and plates: ASTM A36 (fy = 36 ksi)
   B. Structural steel tubes: ASTM A500 grade B (fy = 46 ksi)
   C. Structural steel pipes: ASTM A53 grade B (fy = 35 ksi)

3. Bolts, unless otherwise noted on drawings:

   A. Machine bolts: ASTM A307
   B. Anchor rods: ASTM F1554 grade 55

4. Bolt holes in steel shall be 1/16 inch larger diameter than nominal size of bolt used, unless otherwise noted.
5. For bolted connections, provide 1½ inch edge and end distance, unless otherwise noted.
6. All welds shall be prequalified or qualified by test in conformance with the "Structural Welding Code – Steel" (AWS D1.1-06) of the American Welding Society. Submit Welding Procedure Specifications for approval prior to performing work. Submit Procedure Qualification Reports with Welding Procedure Specifications for welds qualified by test.
7. Minimum tensile strength of weld metal shall be 70 ksi typical, unless otherwise noted. Welding electrodes shall be as recommended by their manufacturer for the position and other conditions of actual use.
8. Weld symbols shown on the drawings do not necessarily differentiate between shop weld and field welds. When field welds are necessary due to construction procedure or sequence, welds shall be provided and be inspected per specifications. All welds shown as field welds shall be done in field as indicated.
9. All structural steel and miscellaneous metal surfaces are to be primed, painted, and hot-dipped galvanized after fabrication, unless noted otherwise. All connectors shall be hot-dip galvanized after fabrication. Steel that is not exposed to weather and is to be encased in concrete shall be left uncoated. Areas within 3 inches of field welded joints shall be left uncoated until welding and bolting operations are complete. See specifications for coating requirements.
10. No penetrations through structural steel columns, beams or girders are allowed except as indicated on the structural drawings.
11. Camber:

    A. Beams detailed without specified camber shall be fabricated so that after erection, any minor camber due to rolling or shop assembly shall be upward. Top of all members shall be clearly identified.

14. Furnish shop and erection drawings of all structural steel for the Structural Engineer's review before fabrication.
3. A welding procedure specification (W.P.S.) per A.W.S. D1.1 shall be developed by the fabricator/erector and approved by the engineer of record or his designee. The W.P.S. shall include the welding parameters recommended by the electrode manufacturer.
4. All complete joint penetration groove welds shall be inspected and tested per City of San Francisco requirements.
5. Inspectors are to be S.F. City deputy inspectors and A.W.S. Q.C.I. Certified (a C.W. Inspector), reference A.W.S. D1.1-94, Section 6.1.3.1.

POST-INSTALLED ANCHORS

1. Post-Installed anchors include all adhesive anchors (reinforcing bar dowels and threaded rods) expansion anchors, screw anchors and undercut anchors set in holes drilled in existing concrete or masonry.
2. Installation of post-installed anchors shall conform to all requirements of the applicable ICC reports and manufacturers' recommendations.
3. Mark the location of all existing reinforcing in the substrate material within 12" of the proposed locations of all post-installed anchors. Notify the Architect/Engineer of any conflicts discovered between the proposed anchor locations and the existing reinforcing prior to fabrication of any steel and prior to any hole drilling, so as to avoid disturbing, cutting, or otherwise harming the existing reinforcing.
4. Adhesive Anchors in Concrete (reinforcing bar dowels or threaded rods):

   A. HILTI "RE-500-SD." ICC ESR-2322

   B. HILTI "HIT-HY 150 MAX-SD." ICC ESR-3013

   C. Simpson "SET-XP" Epoxy Adhesive. ICC ESR-2508

5. Typical embedment depths and proof loads for tension testing are indicated in the tables below.

ADHESIVE ANCHORS

ANCHOR SIZE	TYPICAL EMBEDMENT (U.O.N.)	PROOF LOAD NORMAL WEIGHT CONCRETE	PROOF LOAD LIGHT WEIGHT CONCRETE	PROOF LOAD GROUT-FILLED CMU BLOCK
#3 OR ⅜"ø	3½"	2100 lb.	1600 lb.	1600 lb.
#4 OR ½"ø	4½"	3700 lb.	1900 lb.	1900 lb.
#5 OR ⅝"ø	5⅛"	5800 lb.	2800 lb.	2800 lb.
#6 OR ¾"ø	6¾"	6900 lb.	–	–
#7 OR ⅞"ø	7⅞"	11500 lb.	–	–

CARPENTRY

1. Framing Lumber: All lumber shall meet the following minimum standards except where otherwise noted. All lumber shall be graded and stamped in accordance with the West Coast Lumber Inspection Bureau (WCLIB).

Use	Species	Grade	Remarks
Horizontal Framing:			
4x and 6x Beams	DF	No. 1	
Vertical Framing:			
4x Posts	DF	No. 2	
6x & Larger Posts	DF	No. 1	

   Maximum moisture content shall be 19% or less at the time of installation. Sawn ends of all lumber subject to deterioration shall be treated with wood preservative.
2. All wood members in contact with concrete or masonry shall be pressure-treated.
3. Nails: All nails shall be common wire nails, unless otherwise noted.
4. Predrill nail holes to 70% of nail shank diameter where nails tend to split the wood.
5. Wood Screws:
   Lead holes shall be pre-bored and shall have a diameter of 70% of the root diameter of the screw. Screws shall be screwed into place, not driven into place.
6. Metal Connectors:
   Metal connectors are referred to on the drawings by particular type as manufactured by Simpson Strong-Tie Company, Inc. of Hayward, California. Products of other manufacturers with equivalent load-carrying capacities may be used, provided that the products have current ICC approval. Contractor shall submit product catalog and a table indicating both the designated product and the substituted product along with their respective capacities for approval by the architect. Install all fasteners called for by the product manufacturer unless otherwise noted on the drawings. Use manufacturer-supplied nails where thickness of timber precludes the use of common nails.
7. All metal fasteners, nuts, washers and connectors in contact with pressure-treated wood, fire-retardant treated wood, or exposed to weather shall be AISI type 316L stainless steel or hot-dip galvanized (G185 per ASTM A653 or ASTM A153).
8. Framing for Openings:
   Provide double trimmer and header joists at all openings. Provide joist hangers where joists frame into header and headers frame into trimmers.

ABBREVIATIONS

&	And	JST.	Joist
@	At		
A.B.	Anchor bolt	K	Kips
ADD'L	Additional	KSI	Kips per Square Inch
AISC	American Institute of Steel Construction	LBS.	Pounds
ALT.	Alternate	LL	Live Load
ARCH.	Architect	L.L.H.	Long Leg Horizontal
ASD	Allowable Strength Design	L.L.V.	Long Leg Vertical
ASTM	American Society for Testing and Materials	LTWT	Lightweight
A.W.P.A.	American Wood Preservers Assoc.	L.V.L.	Laminated Veneer Lumber
AWS	American Welding Society	MAX.	Maximum
		M.B.	Machine Bolt
		MECH.	Mechanical
		MFR.	Manufacturer
BLKG.	Blocking	M.I.	Malleable Iron
BM.	Beam	MIL.	Millimeter
B.N.	Boundary Nail	MIN.	Minimum
BOCA	Building Officials and Code Administrators International, Inc.	MISC.	Miscellaneous
		(N)	New
BOTT.	Bottom	NO. or #	Number
BRG.	Bearing	N.S.	Near Side
B.S.	Both Sides	N.T.S.	Not to Scale
BTWN.	Between	NWT	Normalweight
CBC	California Building Code	O.C.	On Center
C.C.	Center to Center	O.D.	Outside Diameter
CCR	California Code of Regulations	O.H.	Opposite Hand
		OPNG.	Opening
C.J.	Control Joint	OPP.	Opposite
C.I.P.	Cast-in-place	OSHPD	Office of Statewide Health Planning and Development
C.L. or ℄	Center Line		
CLG.	Ceiling		
CLR.	Clear		
CMU	Concrete Masonry Unit	P.A.F.	Powder-Actuated Fasteners
COL.	Column		
CONC.	Concrete	PART.	Partial
CONN.	Connection	PCF	Pounds per Cubic Foot
CONT.	Continuous	PL. or ℙ	Plate
C.P.	Complete Penetration	PLY.	Plywood
CSK	Countersink	P.P.	Partial Penetration
CTBR.	Counterbore	PSF	Pounds per Square Foot
CTR.	Center	PSI	Pounds per Square Inch
		PWJ	Plywood Web Joists
DBA	Deformed Bar Anchor		
DBL.	Double	RAD.	Radius
DC	Demand Critical (Weld)	R.D.	Roof Drain
DET., DETL.	Detail	REINF.	Reinforcing
DF	Douglas Fir	REQ.	Required
DIA.,ø	Diameter	RF.	Roof
DIAG.	Diagonal	R.O.	Rough Opening
DL	Dead Load	RND.	Round
DN	Down	R.R.	Remove & Replace
DO	Ditto		
DSA	Division of the State Architect	S.A.D.	See Architectural Drawings
DWG(S).	Drawing(s)	S.C.D.	See Civil Drawings
		SCHED.	Schedule
(E)	Existing	SFRS	Seismic Force-Resisting System
EA.	Each		
E.F.	Each Face	SHT.	Sheet
E.J.	Expansion Joint	SHTG.	Sheathing
ELEV.,EL.	Elevation	SIM.	Similar
EMB.,EMBED.	Embedment	S.M.D.	See Mechanical Drawings
E.N.	Edge Nail	S.O.G.	Slab on Grade
EQ.	Equal	S.P.	Southern Pine
EQUIP.	Equipment	SSTL.	Stainless Steel
E.W.	Each Way	STAGG'D.	Staggered
		STD.	Standard
FDN.	Foundation	STIFF.	Stiffener
F.F.	Finish Floor	STL.	Steel
F.G.	Finish Grade	STRUCT.	Structural
FIN.	Finish	SYMM.,SYM	Symmetrical
F.O.C.	Face of Concrete		
F.O.M.	Face of Masonry	T&B	Top and Bottom
F.O.S.	Face of Stud	T&G	Tongue & Groove
FRMG.	Framing	T.N.	Toe Nail
F.S.	Far Side	T.O.C.	Top of Concrete
FTG.	Footing	T.O.S.	Top of Steel
		T.O.W.	Top of Wall
GA.	Gage	TS	Tube Steel
GALV.	Galvanized	TYP.	Typical
G.L.	Grid Line		
GLB	Glue-Laminated Beam	UBC	Uniform Building Code
GR.	Grade	U.O.N.	Unless Otherwise Noted
HDG.	Hot-dip Galvanized	VERT.	Vertical
HGR.	Hanger	V.I.F., ±	Verify in Field
HK.	Hook		
HORIZ.	Horizontal	W/	With
H.S.B.	High Strength Bolt	W/O	Without
HSS	Hollow Structural Sections	WCLIB	West Coast Lumber Inspection Bureau
HT.	Height	W.P.	Working Point
		W.H.S.	Welded Headed Stud
ICBO	International Council of Building Officials	W.T.S.	Welded Threaded Stud
		W.W.F.	Welded Wire Fabric
ICC	International Code Council	WWPA	Western Wood Products Association
INT.	Interior		
INV.	Inverted		

SIMPSON GUMPERTZ & HEGER
Engineering of Structures and Building Enclosures

Simpson Gumpertz & Heger Inc.
The Landmark @ One Market, Suite 600
San Francisco, California 94105
415.495.3700 fax: 415.495.3550
www.sgh.com

Boston
Los Angeles
New York
San Francisco
Washington, DC

Sutro Tower Inc.
C/O Mr. Eric Dausman
5 La Avanzada Street
San Francisco, CA 94131

Client

No.	Date	Description	By
3	02/15/13	ISSUED FOR PERMIT	JLT
2	01/31/13	ISSUED FOR CLIENT REVIEW	JLT
1	11/28/12	ISSUED FOR CLIENT REVIEW	JLT

SITE & EROSION CONTROL IMPROVEMENTS SUTRO TOWER
1 LA AVANZADA ST SAN FRANCISCO CALIFORNIA

Project

GENERAL NOTES & ABBREVIATIONS

Drawing Title

Commission	Checked	Date
067199.07	JLT	09/26/12
Drawn	Approved	Scale
JLT	ROH	NONE

REGISTERED PROFESSIONAL ENGINEER RONALD D. HAMBURGER No. 2951 STRUCTURAL STATE OF CALIFORNIA

Seal

Drawing No.

S0.1

I:\SF\Projects\2006\067199.07-SMPR\Drawings\Working_Set\SMPR_S001_S002.dwg, 3/26/2013 4:27:30 PM, DWG To PDF.pc3

SUBMITTALS

The following submittals are required. Where submittals include shop drawings, each sheet of shop drawings submitted shall incorporate a pre-applied stamp to be used by the engineer to indicate the status of review and approval. The Structural Engineer will furnish the required text and graphics of the stamp to the Contractor upon request. Submittals shall include those indicated on the following list as well as any other items indicated in the Specifications. This list is provided for convenience only and may not incorporate all requirements indicated in the project specifications.

EARTHWORK

1. Laboratory analysis for each soil material proposed for fill and backfill from on-site and borrow sources.

2. Optimum moisture-maximum density curve for each soil material used as fill, subgrade, subbase, or base course.

CONCRETE REINFORCEMENT

1. Shop drawings complying with the requirements of ACI SP-66. Include bar schedules, shapes of bent bars, spacing of bars, and location of splices.

2. Manufacturer's Certificate: Certify that reinforcing steel and accessories supplied for this project meet or exceed specified requirements.

3. Reports: Certified copies of mill test reports for each heat of reinforcing provided to the project, documenting compliance with the applicable ASTM specification, including chemical analysis, tensile tests and bend tests.

CAST-IN-PLACE CONCRETE

1. Mix designs and test data for concrete mixes, at least 15 days prior to intended placement. Mix design submittals shall include, as a minimum, the following:

   A. List of materials proposed weights and volumes of each material per cubic yard.
   B. Specification of source for each material.
   C. Gradation listing of aggregates and certification that coarse and fine aggregates meet the requirements listed in the Concrete Materials Article of this Section.
   D. List of admixtures, with manufacturer's data sheets.
   E. Certification that all aggregates are compatible with the proposed cement.
   F. Laboratory test reports from trial batches of field experience, as applicable for the specific mix proposed for use.

2. Product data, Material Safety Data Sheets (MSDS) and ICC Evaluation Service Reports, as applicable, for proprietary materials and items, including curing compounds, epoxy resins, surface treatments and proprietary anchoring systems.

3. Drawings indicating proposed locations of construction joints and control joints.

4. Description of curing methods proposed and products to be employed.

SHOTCRETE

1. Mix design and test data for shotcrete, at least 15 days prior to intended first shooting of preconstruction test panels. Include complete list of materials, including admixtures and copies of test reports showing mix has been successfully tested to produce shotcrete with specified properties. Obtain acceptance prior to preconstruction testing.

2. Product data for proprietary materials and items, including reinforcement and forming accessories, pre-bagged shotcrete materials, admixtures, patching compounds, and curing compounds.

3. Nozzlemen certifications in accordance with ACI 506.3R. Submit, for each nozzleman, certification in each type of shotcrete application required. Include the name of the certifying agency and the date of certification.

5. Shotcrete Procedure: Description of shotcrete process proposed.

POST-INSTALLED ANCHORS

1. Product data and ICC ES reports for anchors proposed as alternatives to those specified.

2. Preparation instructions and recommendations.

3. Installation methods.

4. Storage and handling requirements and recommendations.

STRUCTURAL STEEL

1. Shop Drawings and Erection Drawings:

   A. Indicate profiles, sizes, spacing, locations of structural members, openings, attachments, and fasteners.
   B. Indicate welded connections with AWS A2.4 welding symbols. Indicate net weld lengths and sizes. Distinguish between shop and field welds. Identify welds by WPS number.
   C. Include details of cuts, connections, splices, camber, holes, stiffeners, doubler plates, and other pertinent data, such as surface preparation. Include setting drawings, templates, and directions for installation of embedded items to be installed by others.
   D. Indicate type, size, and length of bolts, distinguishing between shop and field bolts. Identify high-strength bolted slip-critical, direct-tension, or tensioned shear/bearing connections.

2. Manufacturer's Mill Certificates: Certify that products meet or exceed specified requirements.

3. Welders Certificates: Certify welders employed on the Work, verifying AWS qualification within the previous 12 months.
4. Welding Procedure Specifications (WPS) per AWS D1.1 for each type of welded joint..
5. Welding Procedure Qualification Record (PQR) for each weld procedure that is not prequalified by AWS D1.1

ROUGH CARPENTRY

1. Product Data: Provide technical data on wood preservative materials and application instructions.

2. Manufacturer's Certificate: Certify that wood products supplied for rough carpentry meet or exceed specified requirements.

STATEMENT OF SPECIAL INSPECTIONS

The following tests and inspections are required for this project. The tests and inspections indicated here are the responsibilities of the Owner's Special Inspector, as required by Section 1704 of the Building Code.

STRUCTURAL INSPECTION, OBSERVATION AND TESTING

1. Special Inspection and Testing are required in Sections 1704, 1706, 1707 and 1708 of the SFBC. The "Statement of Special Inspections," submitted with the permit application, indicates the specific inspections and tests that are required, as well as the persons or firms responsible for this work.

2. All tests and inspections shall be performed by a certified Special Inspector from an independent testing agency who is employed by the Owner (or agent of the Owner) and not the Contractor.

   A. The Special Inspector shall observe the work assigned for conformance with the approved design drawings and specifications.

   B. The Special Inspector shall furnish inspection reports to the building official, the Architect, Structural Engineer and other designated persons. All discrepancies shall be brought to the immediate attention of the Contractor for correction, then, if uncorrected, to the proper design authority and to the building official.

   C. The Special Inspector shall submit a final signed report stating whether the work requiring special inspection was, to the best of the inspector's knowledge, in conformance with the approved plans and specifications and applicable standards of quality and workmanship of the SFBC.

3. Material testing requirements are indicated in the specifications and/or general notes.

4. Structural Observation is required by Section 1710 of the SFBC. Types of work listed below and indicated as requiring "structural observation" shall be observed during periodic site visits by the Structural Engineer. Contractor is responsible for notifying Structural Engineer 48 hours before work is ready for observation. These visits do not constitute Special Inspection.

EARTHWORK

1. Provide periodic inspection during excavation, grading and fill operations.

   A. Observe height of lifts, moisture control and compaction.

   B. Compaction verification tests according to ASTM D 1557. Frequency of tests shall be as deemed appropriate by the Geotechnical Engineer.

2. Provide periodic inspection prior to placement of concrete in cast-in-drilled-hole piles (drilled piers).

   A. Confirm that marked pile locations are correct prior to drilling.

   B. Observe condition of shaft sides and bottom.

   C. Determine presence of free ground water.

   D. Confirm proper use of drilling slurry or placement of casing, if required.

   E. Observe placement and stabilization of reinforcing.

   F. Confirm shaft embedment penetration into rock.

CONCRETE (Applies to Retaining Walls & Drilled Piers Only)

CONCRETE REINFORCEMENT

1. Reinforcing Steel Placement. Verify the following.

   A. The reinforcing grade, size, number, location, and bend detailing are as shown on the drawings and are in acceptable condition.

   B. All required devices have been properly installed to secure the reinforcement in place during the placement of concrete.

CAST-IN-PLACE CONCRETE

2. Placement of concrete. Verify the following.

   A. The concrete delivered to the job has been prepared with the approved mix design appropriate for the application and is transported and placed within the time and under the conditions permitted by ASTM C94 and the project specifications.

   B. The concrete is placed, consolidated, and finished as indicated on the drawings.

   C. Test specimens are taken and cured as indicated in the project specifications.

2. Sampling of Fresh Concrete: ASTM C 172, except as modified for slump to comply with ASTM C 94.

   A. Slump: ASTM C 143; one test at point of placement for each set of compression test specimens; additional tests when concrete consistency seems to have changed.

   B. Air Content: ASTM C 173, volumetric method for lightweight or normal weight concrete; ASTM C 231, pressure method for normal weight concrete; one for each set of compression test specimens.

   C. Unit Weight: ASTM C 138, one sample for each set of compression test specimens.

   D. Concrete Temperature: ASTM C 1064; One test hourly when air temperature is 40 degrees Fahrenheit and below or 80 degrees Fahrenheit and above, and one test for each set of compressive-strength specimens.

   E. Compression Test Specimens: ASTM C 31; One set of four standard cylinders for each compressive-strength test, unless otherwise directed. Mold and store cylinders for laboratory-cured test specimens except when field-cured test specimens are required.

   F. Compressive-Strength Tests: ASTM C 39; One specimen shall be tested at 7 days, two specimens tested at 28 days, and one specimen retained for later testing if required.

   G. Frequency of tests: A minimum of one set of cylinders shall be tested for any individual structure or each day's placement of a class of concrete exceeding 25 cu. yd. An additional set of cylinders shall be tested for each 100 cu. yd. of each class of concrete. When frequency of testing will provide fewer than five strength tests for a given class of concrete, conduct testing from at least five randomly selected batches or from each batch if fewer than five are used.

3. Provide continuous inspection during concrete placement.

4. The Structural Engineer will perform Structural Observation of the following:

   A. Reinforcing and embedded items for concrete stairs, walls, footings, equipment pads, slabs-on-grade, and drilled piers.

SHOTCRETE

1. Preconstruction Test Panels: Prior to starting production shotcrete work, evaluate the Contractor's mock-up panels to assess material quality and workmanship.

   A. Preconstruction test panels shall be 3'-0" x 3'-0" with the same thickness and reinforcing as the portion of the wall represented by the panel.

   B. Take six 3-inch-diameter core specimens from each test panel for testing.

   C. Three of the six cores in each panel shall be taken through reinforcing steel. Inspect these cores for voids behind reinforcing bars and grade the cores per ACI 506.2.

   D. The remaining three cores in each panel shall be taken through unreinforced sections in the panels. Test these cores for 28-day compressive strength in accordance with ASTM C 42.

2. Sampling of Fresh Concrete: As indicated above for Cast-In-Place Concrete

3. Provide continuous inspection during shotcreting operations.

4. The Structural Engineer will perform Structural Observation of the following:

   A. Reinforcing for concrete stairs, footings, slabs-on-grade, and drilled piers.

5. Production Test Panels.

   A. Production Test Panels shall be 2'-0" x 2'-0" with the same thickness as the production wall.

   B. Production Test Panels shall be prepared at least one panel per 50 cubic yards of production, but no less than one panel per day per nozzleman.

   C. Evaluate the Contractor's production test panels to assess material quality and workmanship. One-half of each panel shall contain the same reinforcement as the structure; the other half of each panel shall be unreinforced.

   D. Take six 3-inch-diameter core specimens from each test panel for testing.

   E. Three of the six cores in each panel shall be taken through reinforcing steel. Inspect these cores for voids behind reinforcing bars and grade the cores per ACI 506.2.

   F. The remaining three cores in each panel shall be taken through unreinforced sections in the panels. Test these cores for 28-day compressive strength in accordance with ASTM C 42.

6. Completed Work.

   A. Coring of completed work is required only when results from production test panels or the appearance of finished work indicate unacceptable workmanship.

   B. When required, take three 3-inch-diameter cores from the completed in-place work. The locations of the cores shall be as directed by the Architect/Engineer.

   C. Grade cores for visual defects to determine acceptability.

POST-INSTALLED ANCHORS

1. Verify the following.

   A. The specific manufacturer and model of anchors have been approved for the application by the Architect/Engineer.

   B. The holes are drilled at the angle required and of the diameter and depth required.

   C. The holes are clean prior to installation of the anchors.

   D. The adhesive packaging indicates an expiration date and that the expiration date has not passed.

   E. The adhesive is mixed properly and that the initial portion of adhesive coming out of the nozzle is wasted, as required by the manufacturer.

   F. The anchors are installed according to the manufacturer's recommendations.

STRUCTURAL STEEL

1. GENERAL: Testing and inspection shall conform to Appendix Q of AISC "Seismic Provisions for Structural Steel Buildings" (AISC 341-05), unless specifically noted otherwise.

2. Inspection of welded connections shall include the following items.

   A. Verify that applicable and approved Welding Procedure Specifications (WPS) are available for all welds to be performed.

   B. Verify that welders are appropriately qualified for the type, position and class of weld to be performed

   C. Verify that filler metal selection conforms to the requirements of the approved WPS.

   D. Inspection of materials handling and storage.

   E. Inspection of profile soundness of finished welds.

3. Continuous inspection of the following items is required, except for single-pass fillet welds (throat less than 5/16") and for all welding performed in approved shops per SFBC Section 1704.2.2.

   A. Inspection of joint fit-up and preparation.

   B. Inspection of welding machine settings.

   C. Verification of application of preheat.

   D. Verification of interpass temperature control.

   E. Verification that all applicable requirements of the approved WPS are followed.

4. The Structural Engineer will perform Structural Observation of the following:

   A. Welded and bolted connections.

5. Welding inspection may be waived if welding and fabrication is performed in an approved fabrication shop.

SIMPSON GUMPERTZ & HEGER
Engineering of Structures and Building Enclosures

Simpson Gumpertz & Heger Inc.
The Landmark @ One Market, Suite 600
San Francisco, California 94105
415.495.3700 fax: 415.495.3550
www.sgh.com

Boston
Los Angeles
New York
San Francisco
Washington, DC

Sutro Tower Inc.
C/O Mr. Eric Dausman
5 La Avanzada Street
San Francisco, CA 94131

Client

No.	Date	Description	By
3	02/15/13	ISSUED FOR PERMIT	JLT
2	01/31/13	ISSUED FOR CLIENT REVIEW	JLT
1	11/28/12	ISSUED FOR CLIENT REVIEW	JLT

SITE & EROSION CONTROL IMPROVEMENTS SUTRO TOWER
1 LA AVANZADA ST SAN FRANCISCO CALIFORNIA

Project

GENERAL NOTES

(CONTINUED)

Drawing Title

Commission	Checked	Date
067199.07	JLT	09/26/12
Drawn	Approved	Scale
JLT	ROH	NONE

REGISTERED PROFESSIONAL ENGINEER
ROBERT O. HAMBURGER
No. 2951
STRUCTURAL
STATE OF CALIFORNIA

Seal

Drawing No.

S0.2

I:\SF\Projects\2006\067199.07 SMPR\Drawings\Working_Set\SMPR_S001_S002.dwg, 3/26/2013 4:27:35 PM, DWG To PDF.pc3

BAR SIZE	"D" (IN.)
#3	2¼
#4	3
#5	3¾
#6	4½
#7	5¼
#8	6
#9	9½
#10	10¾
#11	12

NOTE:
ALL BENDS SHALL BE MADE COLD.

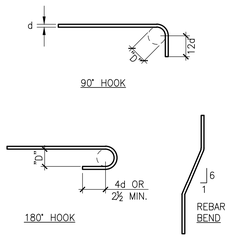

1 TYPICAL REINFORCEMENT BENDS

330101 N.T.S.

BAR SIZE	"D" (IN.)
#3	1½
#4	2
#5	2½

NOTE:
ALL BENDS SHALL BE MADE COLD.

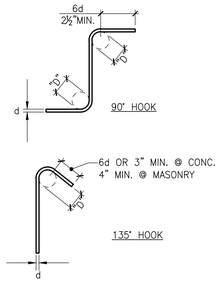

2 TYPICAL TIE AND STIRRUP HOOKS

330102 N.T.S.

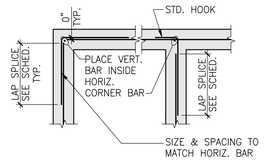

3 TYPICAL HORIZONTAL FOOTING REINFORCING DETAILS

330103 SCALE: 1/2"=1'-0"

	BASIC DEVELOPMENT LENGTH (ld), INCHES			LAP SPLICE LENGTH, INCHES			DEVELOPMENT OF BAR W/ STD. HOOK (ldh), INCHES		
BAR SIZE	f'c=3000	f'c=4000	f'c=5000	f'c=3000	f'c=4000	f'c=5000	f'c=3000	f'c=4000	f'c=5000
#3	17	15	13	22	19	17	9	8	7
#4	22	19	17	29	25	22	11	10	9
#5	28	24	22	36	31	28	14	12	11
#6	33	29	26	43	37	34	17	15	13
#7	48	42	38	63	54	49	20	17	15
#8	55	48	43	72	62	56	22	19	17
#9	62	54	48	81	70	63	25	22	20
#10	70	61	54	91	79	70	28	25	22
#11	78	67	60	101	87	78	31	27	24

MODIFICATION FACTORS:
THE LENGTHS NOTED ABOVE SHALL BE MULTIPLIED BY THE FOLLOWING FACTORS, AS APPLICABLE:
- 1.3 FOR TOP BARS (MORE THAN 12" CONC. CAST BELOW)
- 1.3 FOR LIGHTWEIGHT CONCRETE
- 1.5 FOR BARS WITH LESS THAN 2 BAR DIAMETERS CLEAR SPACING OR FOR BARS WITH LESS THAN 1 BAR DIAMETER OF CONCRETE COVER
- 1.5 FOR EPOXY-COATED BARS, U.O.N.

THE MODIFICATION FACTORS NOTED ABOVE SHALL BE COMBINED WHEN MULTIPLE CONDITIONS OCCUR. FOR EXAMPLE, FOR TOP BARS IN LIGHTWEIGHT CONCRETE, THE SPLICE LENGTH NOTED ABOVE SHALL BE MULTIPLIED BY 1.3x1.3=1.69

NOTES:
1. SPLICES OF HORIZONTAL REINFORCEMENT IN WALLS SHALL BE STAGGERED.
2. SPLICES IN WALLS CONTAINING TWO CURTAINS OF REINFORCEMENT SHALL NOT OCCUR IN THE SAME LOCATION.
3. LAP SPLICES IN CONCRETE MASONRY SHALL BE AS SPECIFIED IN "TYP. LAP SPLICE SCHEDULE – MASONRY".
4. USE MECHANICAL COUPLERS FOR #14 AND LARGER BARS.
5. TOP BAR FACTOR DOES NOT APPLY TO BARS IN WALLS.

6 TYPICAL DEVELOPMENT LENGTH & LAP SPLICE SCHEDULE – CONCRETE

330104 NO SCALE

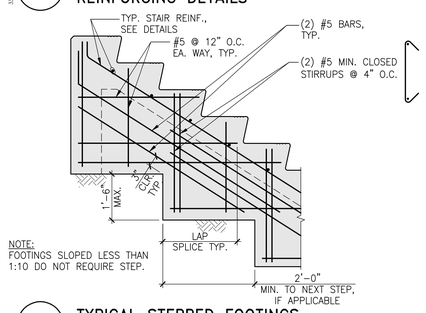

NOTE:
FOOTINGS SLOPED LESS THAN 1:10 DO NOT REQUIRE STEP.

8 TYPICAL STEPPED FOOTINGS

344103 N.T.S.

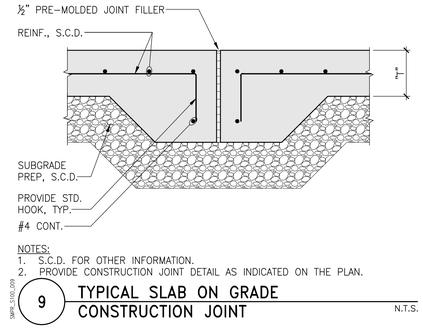

NOTES:
1. S.C.D. FOR OTHER INFORMATION.
2. PROVIDE CONSTRUCTION JOINT DETAIL AS INDICATED ON THE PLAN.

9 TYPICAL SLAB ON GRADE CONSTRUCTION JOINT

SMPR_S100_009 N.T.S.

SIMPSON GUMPERTZ & HEGER
Engineering of Structures and Building Enclosures

Simpson Gumpertz & Heger Inc.
The Landmark @ One Market, Suite 600
San Francisco, California 94105
415.495.3700 fax: 415.495.3550
www.sgh.com

Boston
Los Angeles
New York
San Francisco
Washington, DC

Sutro Tower Inc.
C/O Mr. Eric Dausman
5 La Avanzada Street
San Francisco, CA 94131

Client

No.	Date	Description	By
3	02/15/13	ISSUED FOR PERMIT	JLT
2	01/31/13	ISSUED FOR CLIENT REVIEW	JLT
1	11/28/12	ISSUED FOR CLIENT REVIEW	JLT

SITE & EROSION CONTROL IMPROVEMENTS SUTRO TOWER
1 LA AVANZADA ST
SAN FRANCISCO
CALIFORNIA

Project

TYPICAL DETAILS

Drawing Title

Commission	Checked	Date
067199.07	JLT	09/26/12
Drawn	Approved	Scale
JLT	ROH	NONE

Seal: REGISTERED PROFESSIONAL ENGINEER — RONALD O. HAMBURGER — No. 2951 — STRUCTURAL — STATE OF CALIFORNIA

Drawing No.

S1.0

I:\SF\Projects\2006\067199.07-SMPR\Drawings\Working_Set\SMPR_S100.dwg, 3/26/2013 4:28:10 PM, DWG To PDF.pc3

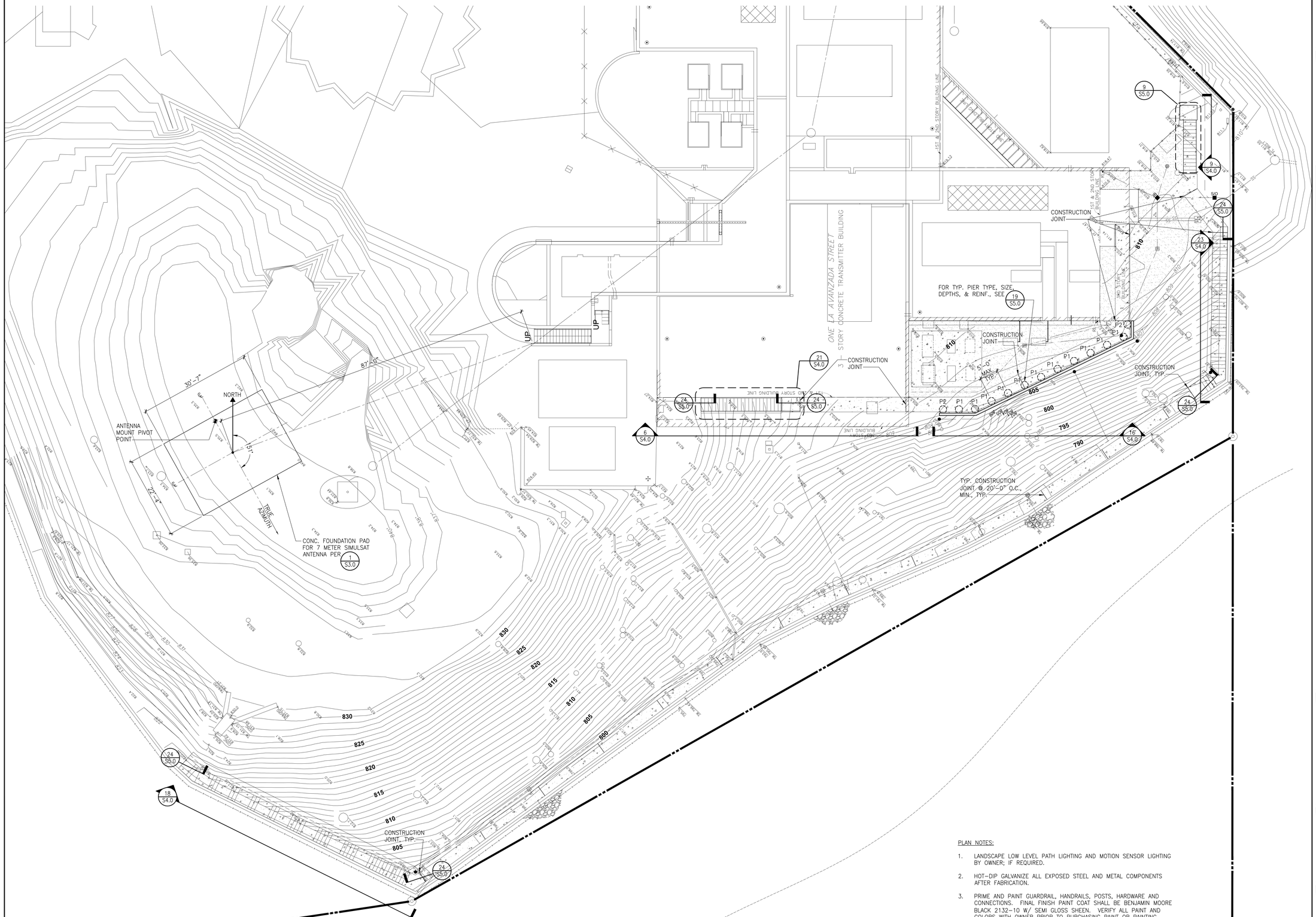

PLAN

SCALE: 1"=10'-0"

PLAN NOTES:

1. LANDSCAPE LOW LEVEL PATH LIGHTING AND MOTION SENSOR LIGHTING BY OWNER; IF REQUIRED.
2. HOT-DIP GALVANIZE ALL EXPOSED STEEL AND METAL COMPONENTS AFTER FABRICATION.
3. PRIME AND PAINT GUARDRAIL, HANDRAILS, POSTS, HARDWARE AND CONNECTIONS. FINAL FINISH PAINT COAT SHALL BE BENJAMIN MOORE BLACK 2132-10 W/ SEMI GLOSS SHEEN. VERIFY ALL PAINT AND COLORS WITH OWNER PRIOR TO PURCHASING PAINT OR PAINTING.
4. PROVIDE MEDIUM BROOM FINISH PERPENDICULAR TO PATH OF TRAVEL TO STAIRS, LANDINGS, AND SLABS-ON-GRADE.
5. NOT ALL CONSTRUCTION JOINTS ARE SHOWN ON THIS SHEET. REFER ALSO TO SITE SECTIONS ON SHEET S4.0.

SIMPSON GUMPERTZ & HEGER

Engineering of Structures and Building Enclosures

Simpson Gumpertz & Heger Inc.
The Landmark @ One Market, Suite 600
San Francisco, California 94105
415.495.3700 fax: 415.495.3550
www.sgh.com

Boston
Los Angeles
New York
San Francisco
Washington, DC

Sutro Tower Inc.
C/O Mr. Eric Dausman
5 La Avanzada Street
San Francisco, CA 94131

Client

No.	Date	Description	By
3	02/15/13	ISSUED FOR PERMIT	JLT
2	01/31/13	ISSUED FOR CLIENT REVIEW	JLT
1	11/28/12	ISSUED FOR CLIENT REVIEW	JLT

SITE & EROSION CONTROL IMPROVEMENTS SUTRO TOWER

1 LA AVANZADA ST SAN FRANCISCO CALIFORNIA

Project

PLAN

Drawing Title

Commission	Checked	Date
067199.07	JLT	09/26/12
Drawn	Approved	Scale
JLT	ROH	NONE

REGISTERED PROFESSIONAL ENGINEER RONALD O. HAMBURGER No. 2951 STRUCTURAL STATE OF CALIFORNIA

Seal

Drawing No.

S2.0

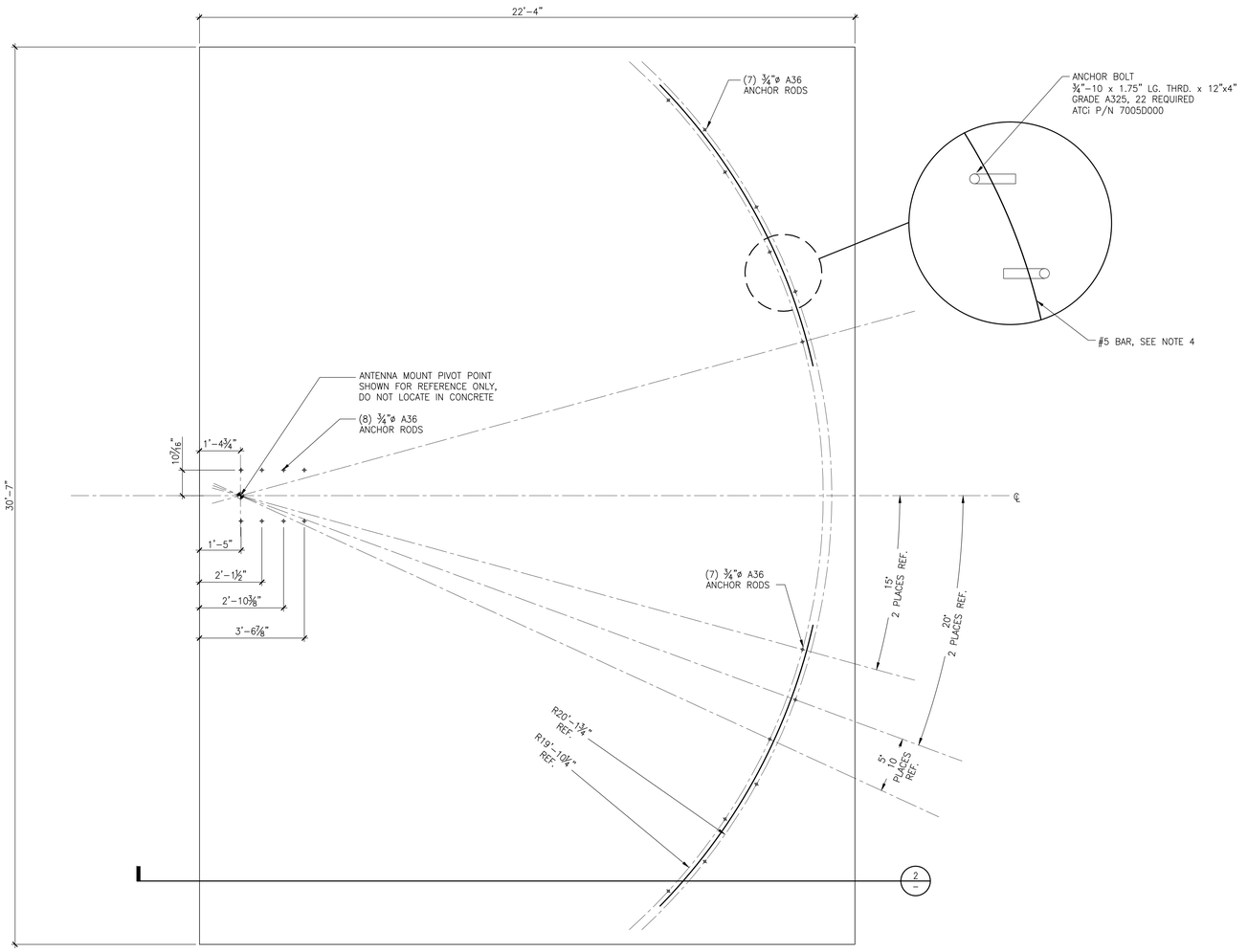

1 PAD A PLAN

SCALE: 1/2"=1'-0"

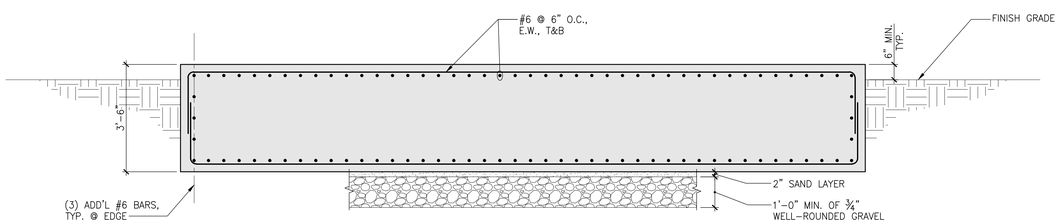

2 PAD SECTION

SCALE: 1/2"=1'-0"

NOTES:

1. PAD LEVELING: PAD SHALL BE FLAT AND LEVEL WITH RESPECT TO THE LONG AND SHORT DIMENSIONS OF THE PAD TO A TOLERANCE OF ± 1/16" DROP PER FOOT OF LINEAR DIMENSION. NO PART OF THE PAD SHALL BE MORE THAN 2" HIGHER OR LOWER THAN ANY OTHER PART OF THE PAD.
2. LOCATE ANCHOR BOLTS AS SHOWN IN THIS DRAWING USING ATCi BOLT AND TEMPLATE KIT PART NUMBER 7005A004, FOR PAD A.
3. TIE BOTTOMS OF REAR ANCHOR BOLTS TOGETHER WITH #5 REBAR. TIE IN BOTH DIRECTIONS.
4. BEND TWO 11 FT. LENGTHS OF #5 REBAR TO A RADIUS OF APPROXIMATELY 240". USE ONE PIECE IN EACH OF THE FRONT ROWS OF ANCHOR BOLTS AS A TIE POINT FOR THE SHORT LEGS OF THE ANCHOR BOLTS AS SHOWN, FOR PAD A.
5. GROUNDING: DRIVE A ½" DIAMETER OR LARGER COPPER ROD A MINIMUM OF 8 FT. INTO THE GROUND ADJACENT TO THE CONCRETE PAD. CONNECT THE ANTENNA STRUCTURE TO THE COPPER ROD USING A #8 OR LARGER CONDUCTOR. CONDUCTOR TO BE PROTECTED BY CONDUIT, FOR PAD A.

SIMPSON GUMPERTZ & HEGER
Engineering of Structures and Building Enclosures

Simpson Gumpertz & Heger Inc.
The Landmark @ One Market, Suite 600
San Francisco, California 94105
415.495.3700 fax: 415.495.3550
www.sgh.com

Boston
Los Angeles
New York
San Francisco
Washington, DC

Sutro Tower Inc.
C/O Mr. Eric Dausman
5 La Avanzada Street
San Francisco, CA 94131

Client

No.	Date	Description	By
3	02/15/13	ISSUED FOR PERMIT	JLT
2	01/31/13	ISSUED FOR CLIENT REVIEW	JLT
1	11/28/12	ISSUED FOR CLIENT REVIEW	JLT

SITE & EROSION CONTROL IMPROVEMENTS SUTRO TOWER

1 LA AVANZADA ST SAN FRANCISCO CALIFORNIA

Project

FOUNDATION PLAN

Drawing Title

Commission	Checked	Date
067199.07	JLT	09/26/12
Drawn	Approved	Scale
JLT	ROH	AS NOTED

REGISTERED PROFESSIONAL ENGINEER
RONALD O. HAMBURGER
No. 2951
STRUCTURAL
STATE OF CALIFORNIA

Seal

Drawing No.

S3.0

I:\SF\Projects\2006\067199.07 SMPR\Drawings\Working_Set\ANTA_S300.dwg, 3/26/2013 4:29:26 PM, DWG To PDF.pc3

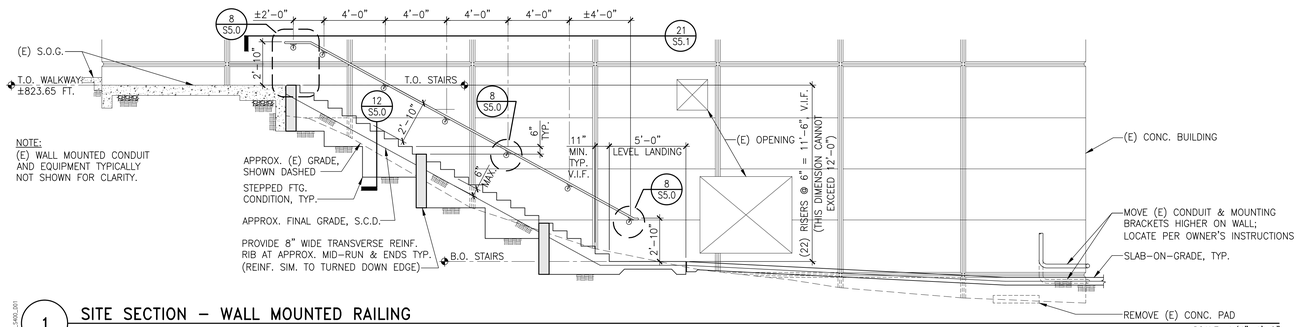

SMPR_S400_001

1 SITE SECTION – WALL MOUNTED RAILING

SCALE: 1/4"=1'–0"

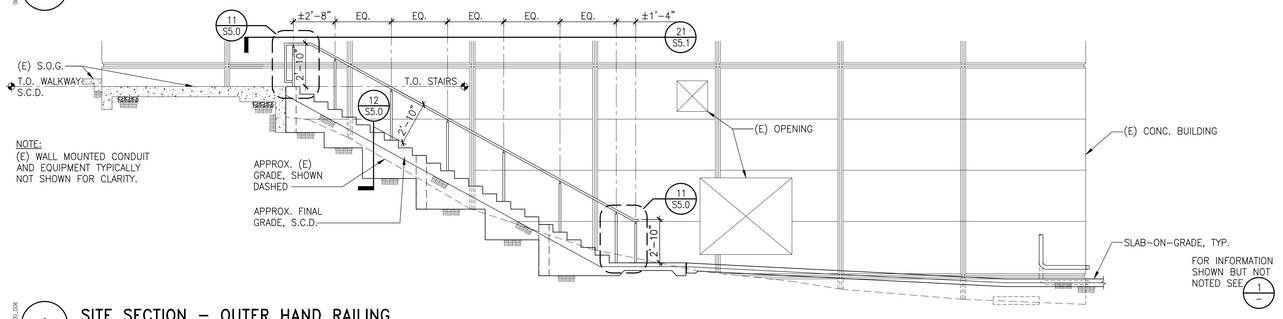

SMPR_S400_006

6 SITE SECTION – OUTER HAND RAILING

SCALE: 1/4"=1'–0"

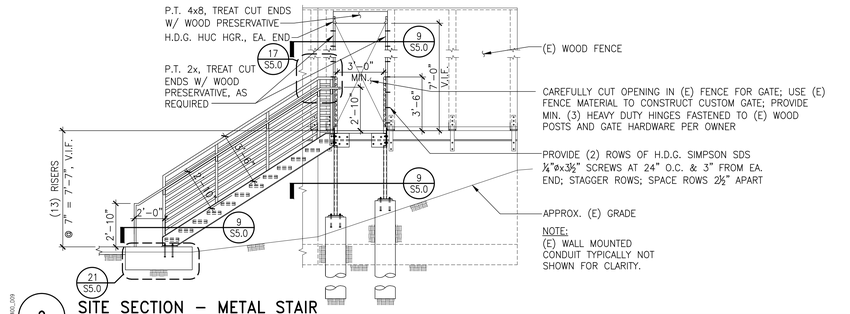

SMPR_S400_009

9 SITE SECTION – METAL STAIR

SCALE: 1/4"=1'–0"

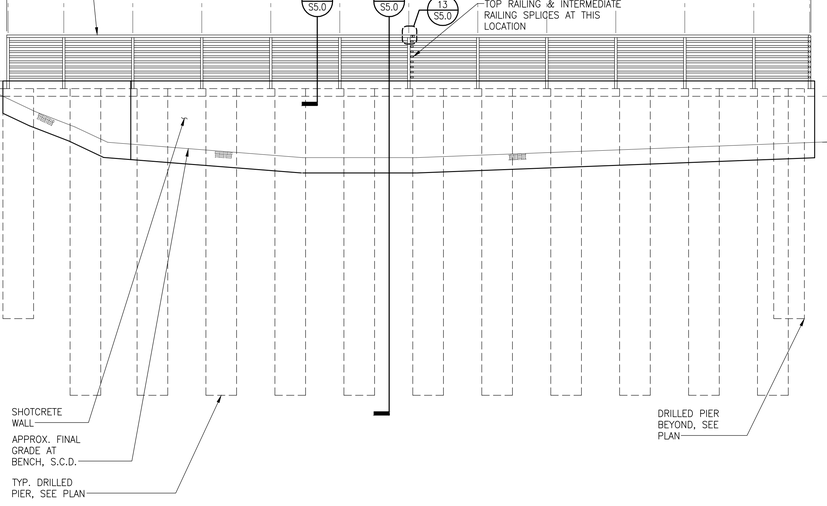

SMPR_S400_016

16 SITE SECTION – SHOTCRETE WALL

SCALE: 1/4"=1'–0"

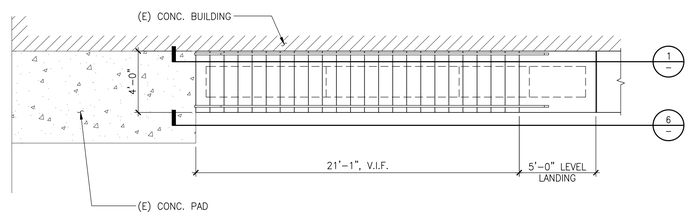

SMPR_S400_021

21 SITE PLAN – CONC. STAIRS

SCALE: 1/4"=1'–0"

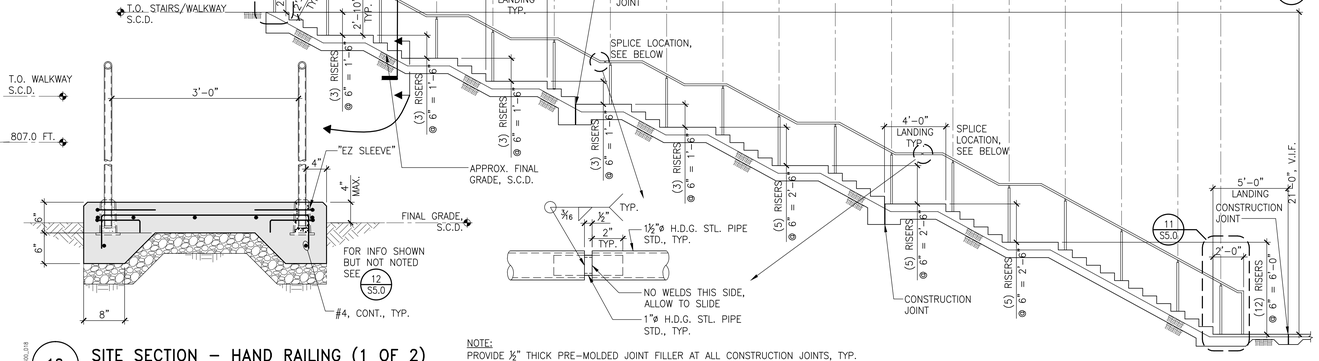

SMPR_S400_018

18 SITE SECTION – HAND RAILING (1 OF 2) (PROVIDE BOTH SIDES OF PATHWAY)

SCALE: 1/4"=1'–0"

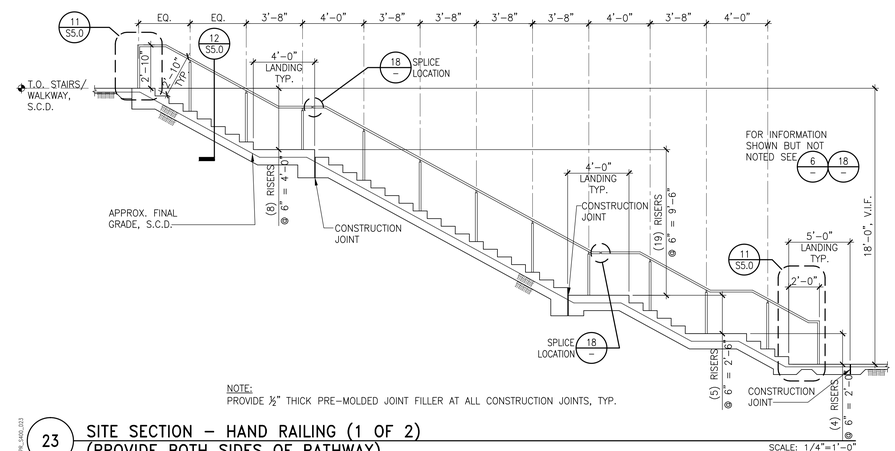

SMPR_S400_023

23 SITE SECTION – HAND RAILING (1 OF 2) (PROVIDE BOTH SIDES OF PATHWAY)

SCALE: 1/4"=1'–0"

SIMPSON GUMPERTZ & HEGER
Engineering of Structures and Building Enclosures

Simpson Gumpertz & Heger Inc.
The Landmark @ One Market, Suite 600
San Francisco, California 94105
415.495.3700 fax: 415.495.3550
www.sgh.com

Boston
Los Angeles
New York
San Francisco
Washington, DC

Sutro Tower Inc.
C/O Mr. Eric Dausman
5 La Avanzada Street
San Francisco, CA 94131

Client

No.	Date	Description	By
3	02/15/13	ISSUED FOR PERMIT	JLT
2	01/31/13	ISSUED FOR CLIENT REVIEW	JLT
1	11/28/12	ISSUED FOR CLIENT REVIEW	JLT

SITE & EROSION CONTROL IMPROVEMENTS SUTRO TOWER

1 LA AVANZADA ST
SAN FRANCISCO
CALIFORNIA

Project

SITE SECTIONS

Drawing Title

Commission	Checked	Date
067199.07	JLT	09/26/12
Drawn	Approved	Scale
JLT	ROH	AS NOTED

REGISTERED PROFESSIONAL ENGINEER RONALD D. HAMBURGER No. 2951 STRUCTURAL STATE OF CALIFORNIA

Seal

Drawing No.

S4.0

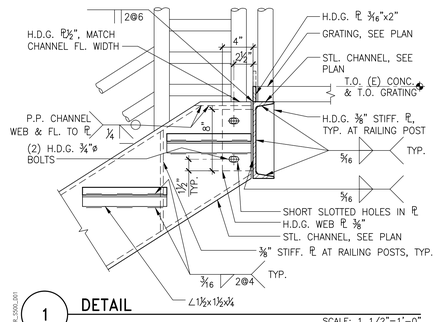

1 DETAIL

SCALE: 1 1/2"=1'-0"

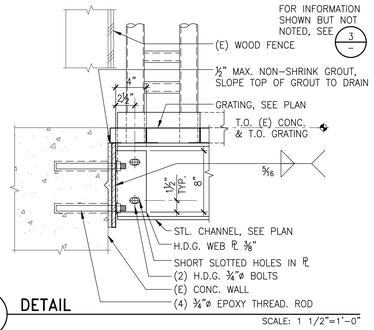

2 DETAIL

SCALE: 1 1/2"=1'-0"

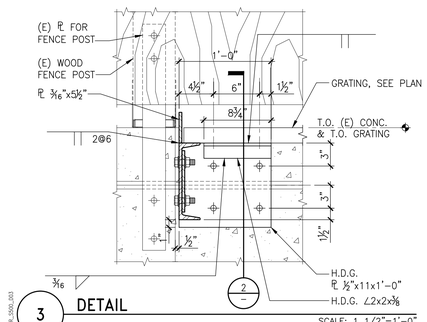

3 DETAIL

SCALE: 1 1/2"=1'-0"

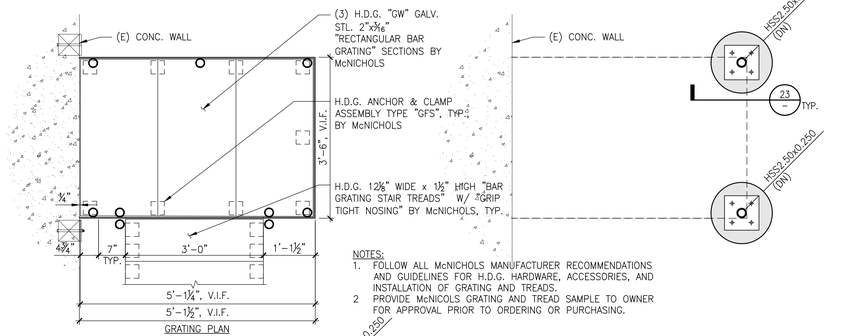

NOTES:
1. FOLLOW ALL McNICHOLS MANUFACTURER RECOMMENDATIONS AND GUIDELINES FOR H.D.G. HARDWARE, ACCESSORIES, AND INSTALLATION OF GRATING AND TREADS.
2. PROVIDE McNICOLS GRATING AND TREAD SAMPLE TO OWNER FOR APPROVAL PRIOR TO ORDERING OR PURCHASING.

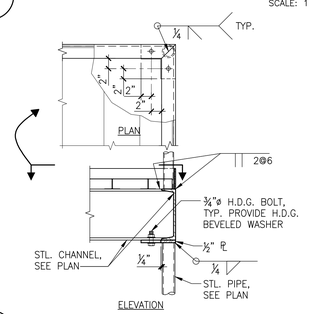

ELEVATION

6 DETAIL

SCALE: 1"=1'-0"

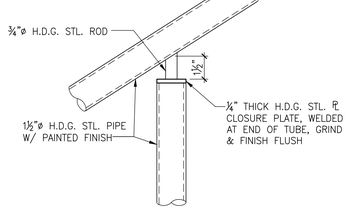

7 HANDRAIL DETAIL

SCALE: 3"=1'-0"

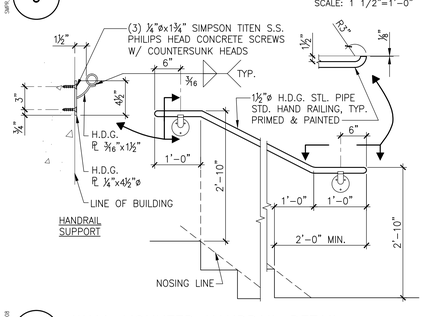

8 WALL MOUNTED HANDRAIL DETAIL

SCALE: 3/4"=1'-0"

NOTE:
ALL STL. FRAMING AND HARDWARE IS H.D.G.

9 LANDING PLANS

SCALE: 3/4"=1'-0"

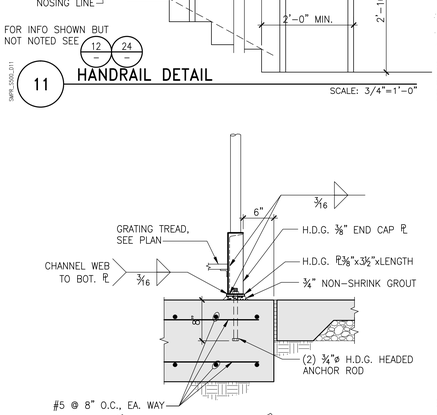

11 HANDRAIL DETAIL

SCALE: 3/4"=1'-0"

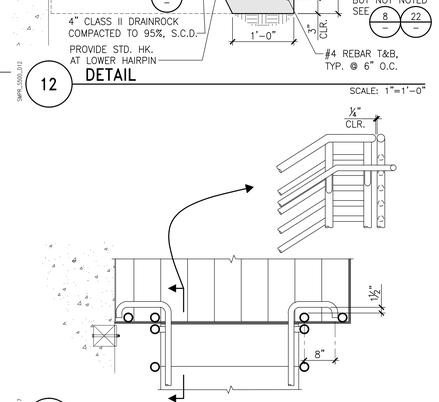

12 DETAIL

SCALE: 1"=1'-0"

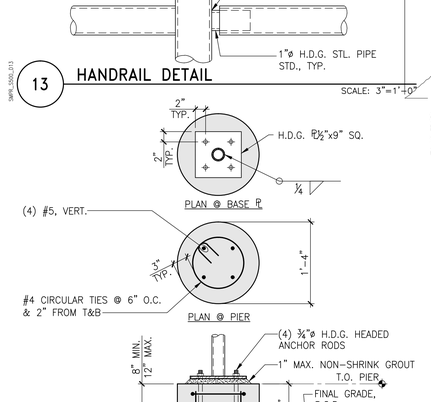

13 HANDRAIL DETAIL

SCALE: 3"=1'-0"

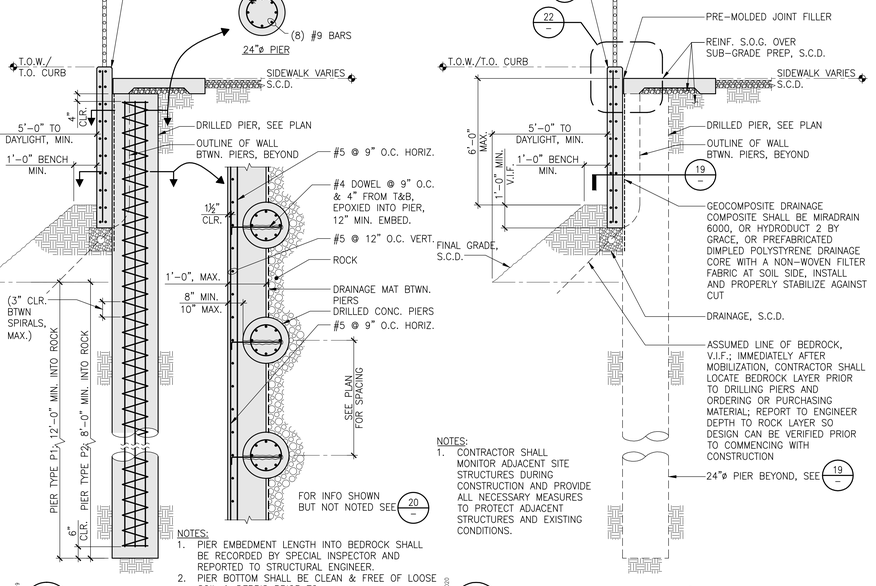

NOTES:
1. PIER EMBEDMENT LENGTH INTO BEDROCK SHALL BE RECORDED BY SPECIAL INSPECTOR AND REPORTED TO STRUCTURAL ENGINEER.
2. PIER BOTTOM SHALL BE CLEAN & FREE OF LOOSE SOIL & DEBRIS PRIOR TO TO PLACEMENT OF CONCRETE.

19 DETAIL

SCALE: 3/8"=1'-0"

20 SECTION THRU PIERS/WALL

SCALE: 3/8"=1'-0"

21 DETAIL

SCALE: 1"=1'-0"

GRATING PLAN

17 HANRAIL DETAIL

SCALE: 3/4"=1'-0"

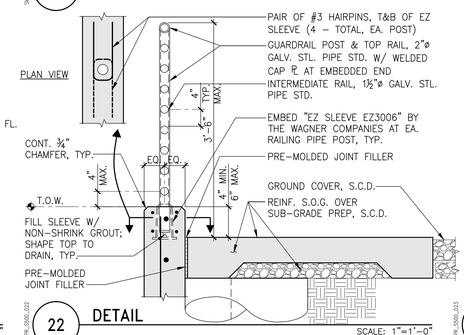

22 DETAIL

SCALE: 1"=1'-0"

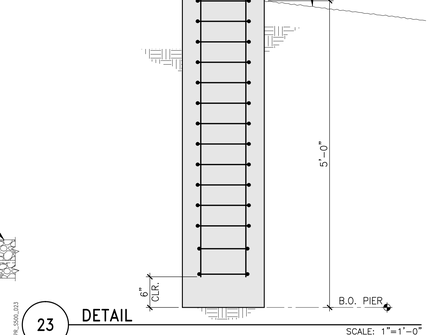

23 DETAIL

SCALE: 1"=1'-0"

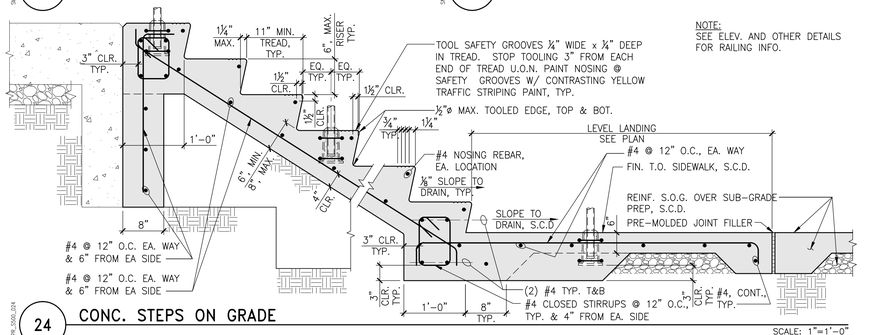

NOTE:
SEE ELEV. AND OTHER DETAILS FOR RAILING INFO.

24 CONC. STEPS ON GRADE

SCALE: 1"=1'-0"

SIMPSON GUMPERTZ & HEGER
Engineering of Structures and Building Enclosures

Simpson Gumpertz & Heger Inc.
The Landmark @ One Market, Suite 600
San Francisco, California 94105
415.495.3700 fax: 415.495.3550
www.sgh.com

Boston
Los Angeles
New York
San Francisco
Washington, DC

Sutro Tower Inc.
C/O Mr. Eric Dausman
5 La Avanzada Street
San Francisco, CA 94131

Client

No.	Date	Description	By
3	02/15/13	ISSUED FOR PERMIT	JLT
2	01/31/13	ISSUED FOR CLIENT REVIEW	JLT
1	11/28/12	ISSUED FOR CLIENT REVIEW	JLT

SITE & EROSION CONTROL IMPROVEMENTS SUTRO TOWER

1 LA AVANZADA ST SAN FRANCISCO CALIFORNIA

Project

DETAILS

Drawing Title

Commission	Checked	Date
067199.07	JLT	09/26/12
Drawn	Approved	Scale
JLT	ROH	NONE

REGISTERED PROFESSIONAL ENGINEER RONALD O. HAMBURGER No. 2951 STRUCTURAL STATE OF CALIFORNIA

Seal

Drawing No.

S5.0

I:\SF\Projects\2006\067199.07 SMPR\Drawings\Working_Set\SMPR_S500.dwg, 3/26/2013 4:30:31 PM, DWG To PDF.pc3